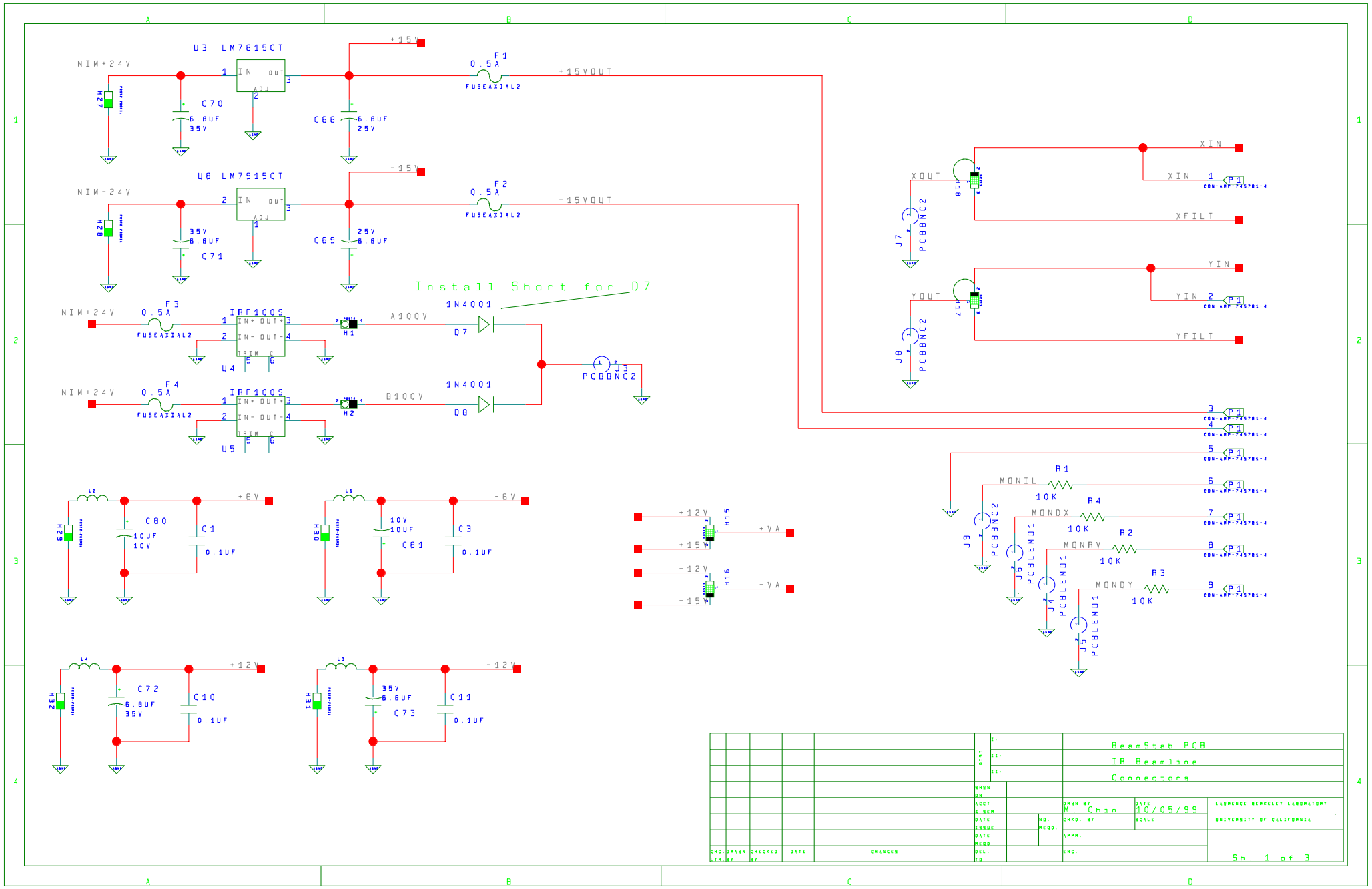
U3 LM7815CT
NIM+24V
+15V
F1
0.5A
FUSEAXIAL2
+15VOUT
C70
6.8UF
35V
C68
6.8UF
25V
U8 LM7915CT
NIM-24V
-15V
F2
0.5A
FUSEAXIAL2
-15VOUT
C71
35V
6.8UF
C69
25V
6.8UF
Install Short for D7
NIM+24V
F3
0.5A
FUSEAXIAL2
IRF100S
U4
A100V
1N4001
D7
J3
PCBBNC2
NIM+24V
F4
0.5A
FUSEAXIAL2
IRF100S
U5
B100V
1N4001
D8
XIN
XIN
XFILT
XOUT
J7
PCBBNC2
YIN
YIN
YFILT
YOUT
J8
PCBBNC2
MONIL
R1
10K
MONDX
R4
10K
MONRV
R2
10K
MONDY
R3
10K
J9
PCBBNC2
J6
PCBLEMO1
J4
PCBLEMO1
J5
PCBLEMO1
+6V
C80
10UF
10V
C1
0.1UF
-6V
C81
10V
10UF
C3
0.1UF
+12V
+15V
H15
+VA
-12V
-15V
H16
-VA
+12V
C72
6.8UF
35V
C10
0.1UF
-12V
C73
35V
6.8UF
C11
0.1UF
BeamStab PCB
IR Beamline
Connectors
DRWN BY
M. Chin
DATE
10/05/99
LAWRENCE BERKELEY LABORATORY
UNIVERSITY OF CALIFORNIA
Sh. 1 of 3

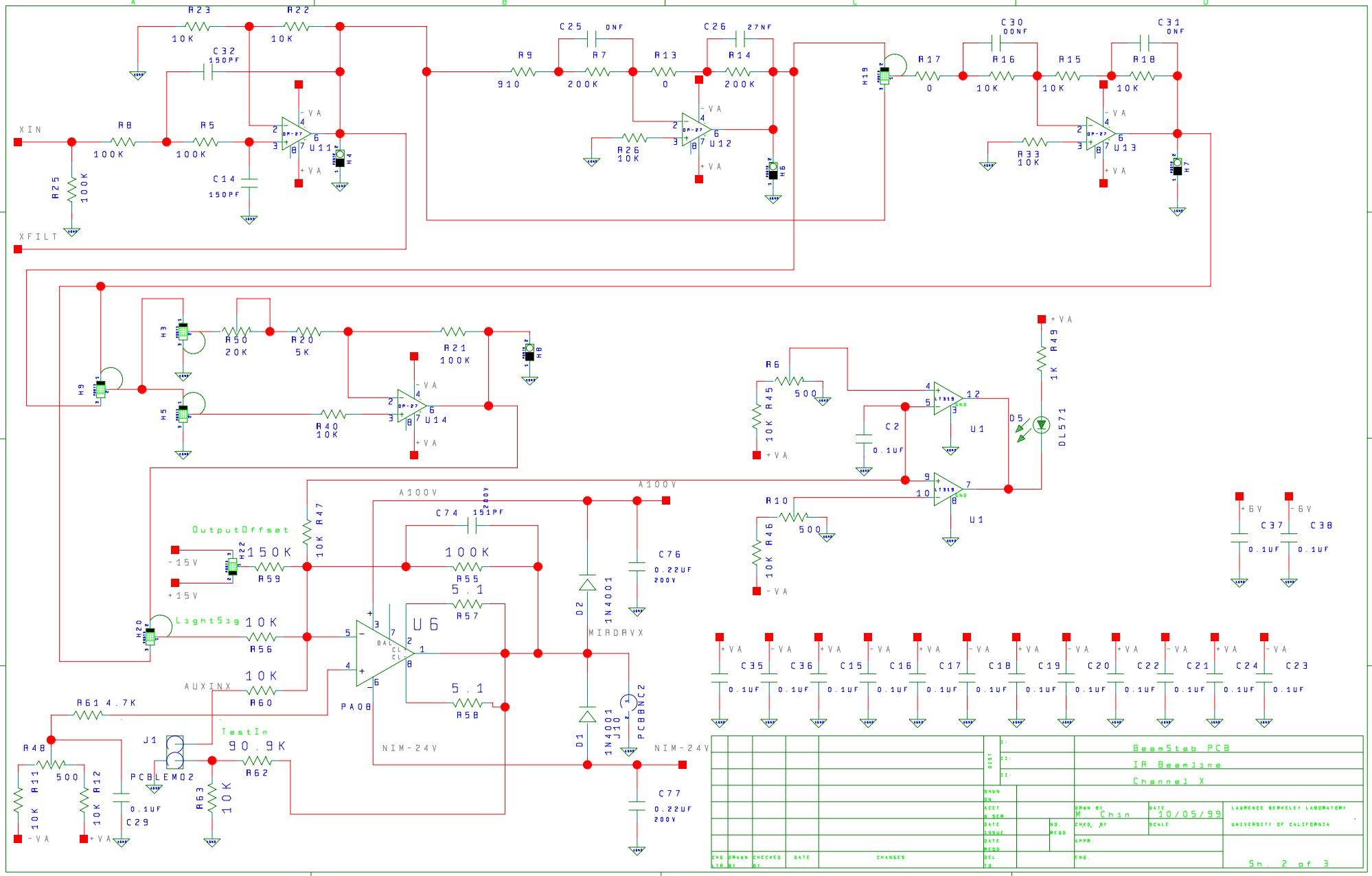
XIN
XFILT
R23 10K
R22 10K
C32 150PF
R8 100K
R5 100K
R25 100K
C14 150PF
U11
H4
R9 910
C25 0NF
R7 200K
R13 0
C26 27NF
R14 200K
R26 10K
U12
H6
H19
R17 0
C30 00NF
R16 10K
R15 10K
C31 0NF
R18 10K
R33 10K
U13
H7
H3
H5
H9
R50 20K
R20 5K
R21 100K
H8
R40 10K
U14
R6 500
R45 10K
C2 0.1UF
U1
D5
DL571
R49 1K
R10 500
R46 10K
C37 0.1UF
C38 0.1UF
+6V
-6V
OutputOffset
-15V
+15V
H22
150K
R59
R47 10K
A100V
C74 151PF
100K
R55
5.1
R57
U6
LightSig
H20
10K
R56
AUXINX
10K
R60
PA08
5.1
R58
NIM-24V
D2 1N4001
D1 1N4001
MIRDRVX
J10
PCBBNC2
C76 0.22UF 200V
C77 0.22UF 200V
R61 4.7K
R48 500
R11 10K
R12 10K
C29 0.1UF
J1
PCBLEMO2
TestIn
90.9K
R62
R63 10K
C35 0.1UF
C36 0.1UF
C15 0.1UF
C16 0.1UF
C17 0.1UF
C18 0.1UF
C19 0.1UF
C20 0.1UF
C22 0.1UF
C21 0.1UF
C24 0.1UF
C23 0.1UF
BeamStab PCB
IR Beamline
Channel X
M. Chain
10/05/99
LAWRENCE BERKELEY LABORATORY
UNIVERSITY OF CALIFORNIA
Sh. 2 of 3

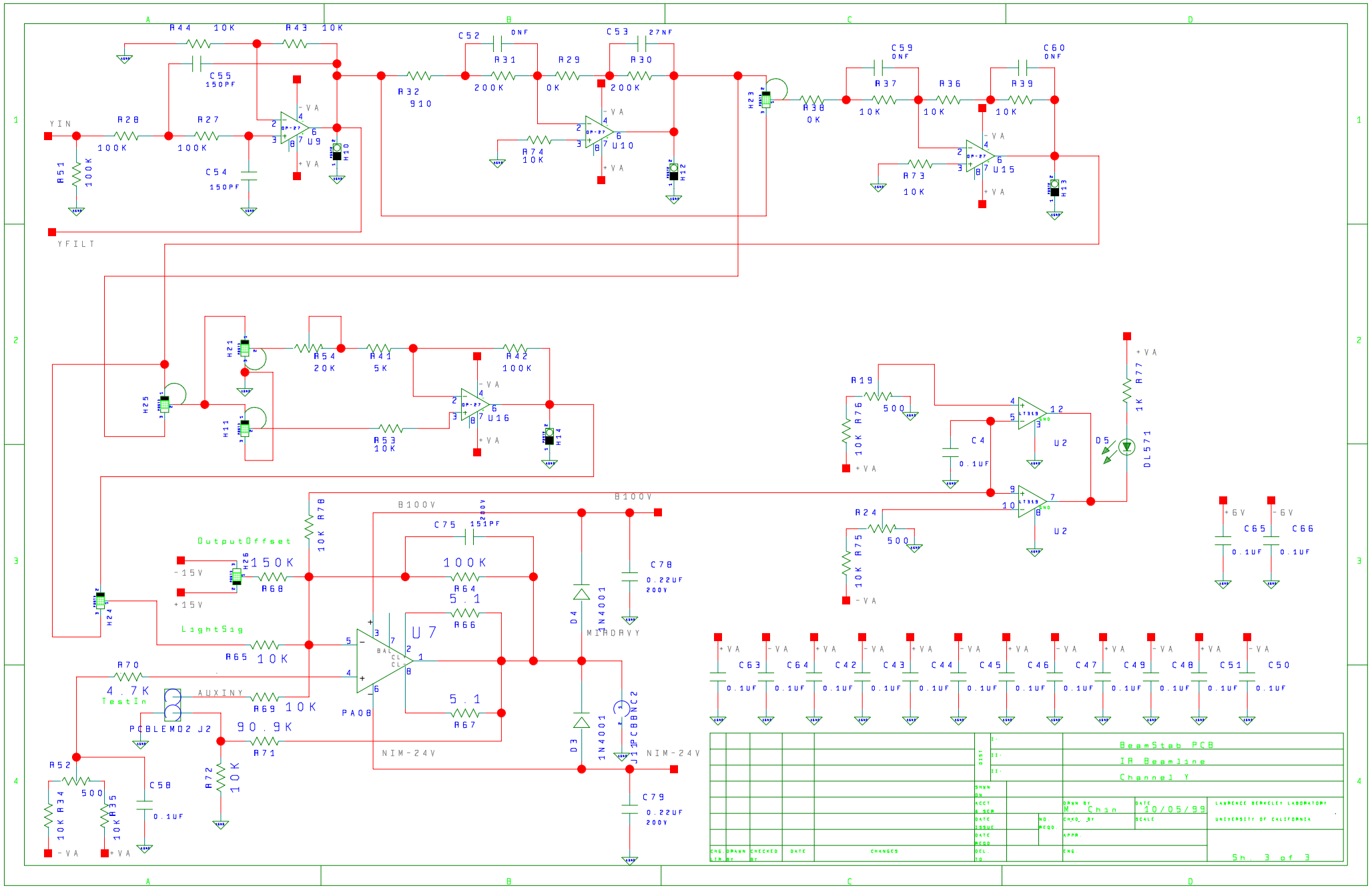
YIN
YFILT
R44 10K
R43 10K
C55 150PF
C54 150PF
R28 100K
R27 100K
R51 100K
U9
H10
C52 0NF
C53 27NF
R31 200K
R29 0K
R30 200K
R32 910
R74 10K
U10
H12
H23
R38 0K
C59 0NF
C60 0NF
R37 10K
R36 10K
R39 10K
R73 10K
U15
H13
H21
H11
H25
R54 20K
R41 5K
R42 100K
R53 10K
U16
H14
R19 500
R76 10K
C4 0.1UF
U2
D5
DL571
R77 1K
R24 500
R75 10K
U2
C65 0.1UF
C66 0.1UF
+6V
-6V
OutputOffset
-15V
+15V
H26
150K
R68
R78 10K
H24
LightSig
R65 10K
R70 4.7K
TestIn
AUXINY
R69 10K
PCBLEMO2 J2
90.9K
R71
R52 500
R34 10K
R35 10K
C58 0.1UF
R72 10K
B100V
C75 151PF
100K
R64
5.1
R66
U7
PA08
5.1
R67
NIM-24V
D4 1N4001
D3 1N4001
MIRDRVY
C78 0.22UF 200V
C79 0.22UF 200V
J1 PCBBNC2
NIM-24V
C63 0.1UF
C64 0.1UF
C42 0.1UF
C43 0.1UF
C44 0.1UF
C45 0.1UF
C46 0.1UF
C47 0.1UF
C49 0.1UF
C48 0.1UF
C51 0.1UF
C50 0.1UF
BeamStab PCB
IR Beamline
Channel Y
DRWN BY M. Chin
DATE 10/05/99
LAWRENCE BERKELEY LABORATORY
UNIVERSITY OF CALIFORNIA
Sh. 3 of 3