Model 2100 6 1/2-Digit Resolution Digital Multimeter

User's Manual

2100-900-01 Rev. B / July 2007

KEITHLEY

A GREATER MEASURE OF CONFIDENCE

WARRANTY

Keithley Instruments, Inc. warrants this product to be free from defects in material and workmanship for a period of one (1) year from date of shipment.

Keithley Instruments, Inc. warrants the following items for 90 days from the date of shipment: probes, cables, software, rechargeable batteries, diskettes, and documentation.

During the warranty period, Keithley Instruments will, at its option, either repair or replace any product that proves to be defective.

To exercise this warranty, write or call your local Keithley Instruments representative, or contact Keithley Instruments headquarters in Cleveland, Ohio. You will be given prompt assistance and return instructions. Send the product, transportation prepaid, to the indicated service facility. Repairs will be made and the product returned, transportation prepaid. Repaired or replaced products are warranted for the balance of the original warranty period, or at least 90 days.

LIMITATION OF WARRANTY

This warranty does not apply to defects resulting from product modification without Keithley Instruments' express written consent, or misuse of any product or part. This warranty also does not apply to fuses, software, non-rechargeable batteries, damage from battery leakage, or problems arising from normal wear or failure to follow instructions.

THIS WARRANTY IS IN LIEU OF ALL OTHER WARRANTIES, EXPRESSED OR IMPLIED, INCLUDING ANY IMPLIED WARRANTY OF MERCHANTABILITY OR FITNESS FOR A PARTICULAR USE. THE REMEDIES PROVIDED HEREIN ARE BUYER'S SOLE AND EXCLUSIVE REMEDIES.

NEITHER KEITHLEY INSTRUMENTS, INC. NOR ANY OF ITS EMPLOYEES SHALL BE LIABLE FOR ANY DIRECT, INDIRECT, SPECIAL, INCIDENTAL, OR CONSEQUENTIAL DAMAGES ARISING OUT OF THE USE OF ITS INSTRUMENTS AND SOFTWARE, EVEN IF KEITHLEY INSTRUMENTS, INC. HAS BEEN ADVISED IN ADVANCE OF THE POSSIBILITY OF SUCH DAMAGES. SUCH EXCLUDED DAMAGES SHALL INCLUDE, BUT ARE NOT LIMITED TO: COST OF REMOVAL AND INSTALLATION, LOSSES SUSTAINED AS THE RESULT OF INJURY TO ANY PERSON, OR DAMAGE TO PROPERTY.

KEITHLEY

A GREATER MEASURE OF CONFIDENCE

Keithley Instruments, Inc.

Corporate Headquarters • 28775 Aurora Road • Cleveland, Ohio 44139
440-248-0400 • Fax: 440-248-6168 • 1-888-KEITHLEY (1-888-534-8453) • www.keithley.com

3/07

Model 2100
6 1/2-Digit Resolution Digital Multimeter
User's Manual

©2007, Keithley Instruments, Inc.
All rights reserved.
Cleveland, Ohio, U.S.A.
Document Number: 2100-900-01 Rev. B / July 2007

Manual Print History

The print history shown below lists the printing dates of all Revisions and Addenda created for this manual. The Revision Level letter increases alphabetically as the manual undergoes subsequent updates. Addenda, which are released between Revisions, contain important change information that the user should incorporate immediately into the manual. Addenda are numbered sequentially. When a new Revision is created, all Addenda associated with the previous Revision of the manual are incorporated into the new Revision of the manual. Each new Revision includes a revised copy of this print history page.

Revision A (Document Number 2100-900-01) .....June 2007
Revision B (Document Number 2100-900-01) ..... July 2007

All Keithley Instruments product names are trademarks or registered trademarks of Keithley Instruments, Inc.
Other brand names are trademarks or registered trademarks of their respective holders.

KEITHLEY

Safety Precautions

The following safety precautions should be observed before using this product and any associated instrumentation. Although some instruments and accessories would normally be used with non-hazardous voltages, there are situations where hazardous conditions may be present.

This product is intended for use by qualified personnel who recognize shock hazards and are familiar with the safety precautions required to avoid possible injury. Read and follow all installation, operation, and maintenance information carefully before using the product. Refer to the user documentation for complete product specifications.

If the product is used in a manner not specified, the protection provided by the product warranty may be impaired.

The types of product users are:

Responsible body is the individual or group responsible for the use and maintenance of equipment, for ensuring that the equipment is operated within its specifications and operating limits, and for ensuring that operators are adequately trained.

Operators use the product for its intended function. They must be trained in electrical safety procedures and proper use of the instrument. They must be protected from electric shock and contact with hazardous live circuits.

Maintenance personnel perform routine procedures on the product to keep it operating properly, for example, setting the line voltage or replacing consumable materials. Maintenance procedures are described in the user documentation. The procedures explicitly state if the operator may perform them. Otherwise, they should be performed only by service personnel.

Service personnel are trained to work on live circuits, perform safe installations, and repair products. Only properly trained service personnel may perform installation and service procedures.

Keithley Instruments products are designed for use with electrical signals that are rated Measurement Category I and Measurement Category II, as described in the International Electrotechnical Commission (IEC) Standard IEC 60664. Most measurement, control, and data I/O signals are Measurement Category I and must not be directly connected to mains voltage or to voltage sources with high transient over-voltages. Measurement Category II connections require protection for high transient over-voltages often associated with local AC mains connections. Assume all measurement, control, and data I/O connections are for connection to Category I sources unless otherwise marked or described in the user documentation.

Exercise extreme caution when a shock hazard is present. Lethal voltage may be present on cable connector jacks or test fixtures. The American National Standards Institute (ANSI) states that a shock hazard exists when voltage levels greater than 30V RMS, 42.4V peak, or 60VDC are present. A good safety practice is to expect that hazardous voltage is present in any unknown circuit before measuring.

Operators of this product must be protected from electric shock at all times. The responsible body must ensure that operators are prevented access and/or insulated from every connection point. In some cases, connections must be exposed to potential human contact. Product operators in these circumstances must be trained to protect themselves from the risk of electric shock. If the circuit is capable of operating at or above 1000V, no conductive part of the circuit may be exposed.

Do not connect switching cards directly to unlimited power circuits. They are intended to be used with impedance-limited sources. NEVER connect switching cards directly to AC mains. When connecting sources to switching cards, install protective devices to limit fault current and voltage to the card.

Before operating an instrument, ensure that the line cord is connected to a properly-grounded power receptacle. Inspect the connecting cables, test leads, and jumpers for possible wear, cracks, or breaks before each use.

When installing equipment where access to the main power cord is restricted, such as rack mounting, a separate main input power disconnect device must be provided in close proximity to the equipment and within easy reach of the operator.

For maximum safety, do not touch the product, test cables, or any other instruments while power is applied to the circuit under test. ALWAYS remove power from the entire test system and discharge any capacitors before: connecting or disconnecting cables or jumpers, installing or removing switching cards, or making internal changes, such as installing or removing jumpers.

Do not touch any object that could provide a current path to the common side of the circuit under test or power line (earth) ground. Always make measurements with dry hands while standing on a dry, insulated surface capable of withstanding the voltage being measured.

The instrument and accessories must be used in accordance with its specifications and operating instructions, or the safety of the equipment may be impaired.

Do not exceed the maximum signal levels of the instruments and accessories, as defined in the specifications and operating information, and as shown on the instrument or test fixture panels, or switching card.

When fuses are used in a product, replace with the same type and rating for continued protection against fire hazard.

Chassis connections must only be used as shield connections for measuring circuits, NOT as safety earth ground connections.

If you are using a test fixture, keep the lid closed while power is applied to the device under test. Safe operation requires the use of a lid interlock.

If a ⏚ screw is present, connect it to safety earth ground using the wire recommended in the user documentation.

The ⚠ symbol on an instrument indicates that the user should refer to the operating instructions located in the user documentaion.

The ⚠ symbol on an instrument shows that it can source or measure 1000V or more, including the combined effect of normal and common mode voltages. Use standard safety precautions to avoid personal contact with these voltages.

The ⚠ symbol on an instrument shows that the surface may be hot. Avoid personal contact to prevent burns.

The ⏚ symbol indicates a connection terminal to the equipment frame.

If this Hg symbol is on a product , it indicates that mercury is present in the display lamp. Please note that the lamp must be properly disposed of according to federal, state, and local laws.

The **WARNING** heading in the user documentation explains dangers that might result in personal injury or death. Always read the associated information very carefully before performing the indicated procedure.

The **CAUTION** heading in the user documentation explains hazards that could damage the instrument. Such damage may invalidate the warranty.

Instrumentation and accessories shall not be connected to humans.

Before performing any maintenance, disconnect the line cord and all test cables.

To maintain protection from electric shock and fire, replacement components in mains circuits - including the power transformer, test leads, and input jacks - must be purchased from Keithley Instruments. Standard fuses with applicable national safety approvals may be used if the rating and type are the same. Other components that are not safety-related may be purchased from other suppliers as long as they are equivalent to the original component (note that selected parts should be purchased only through Keithley Instruments to maintain accuracy and functionality of the product). If you are unsure about the applicability of a replacement component, call a Keithley Instruments office for information.

To clean an instrument, use a damp cloth or mild, water-based cleaner. Clean the exterior of the instrument only. Do not apply cleaner directly to the instrument or allow liquids to enter or spill on the instrument. Products that consist of a circuit board with no case or chassis (e.g., a data acquisition board for installation into a computer) should never require cleaning if handled according to instructions. If the board becomes contaminated and operation is affected, the board should be returned to the factory for proper cleaning/servicing.

Table of Contents

Section	Topic	Page
1	**General Information**	1-1
	Introduction	1-2
	Feature overview	1-2
	Specifications	1-3
	Manual addenda	1-3
	Precautions for operation	1-3
	Upkeep of the Model 2100	1-3
	Safety information	1-4
	Safety symbols and terms	1-4
	Inspection for damage	1-4
	Shipment contents	1-5
	Instruction manual	1-5
	Repacking for shipment	1-5
2	**Getting Started**	2-1
	Overview	2-2
	Setting up the Model 2100 Digital Multimeter	2-2
	Adjusting the handle	2-2
	Setting the line voltage	2-4
	Connecting the power	2-7
	Changing the fuses	2-9
	Factory default settings	2-18
	Model 2100 familiarization	2-19
	The front panel	2-19
	The display	2-21
	The rear panel	2-23
3	**Basic Measurement Functions**	3-1
	Introduction	3-2
	Voltage measurements (DC and AC)	3-2
	How to measure voltage	3-3
	Current measurements (DC and AC)	3-3
	How to measure current	3-3
	Resistance measurements (2- and 4-wire)	3-4
	How to measure resistance	3-6
	Frequency and period measurements	3-6
	How to measure frequency and period	3-6
	Continuity measurements	3-7
	How to measure the continuity	3-7
	Diode measurements	3-7
	How to measure a diode	3-8
	RTD measurements	3-8
	2-wire RTD measurements	3-8
	3-wire RTD measurements	3-9
	4-wire RTD measurements	3-10

Section	Topic	Page

4 Front Panel Operations 4-1
Introduction 4-2
Measurement configuration 4-2
Set ADC (Auto Zero and Auto Gain) 4-2
Filter 4-4
Resolution setting (digits) 4-6
DC input resistance 4-7
Threshold resistance (continuity) 4-8
Range (manual and auto) 4-9
Rate (integration time) 4-10
Sensor selection for temperature 4-11
Measurements 4-11
RTD 4-11
Input terminal switch 4-13
Trigger operations 4-14
Trigger mode 4-14
Trigger source 4-16
Trigger setting 4-16
Math operations 4-19
Ratio 4-20
% (Percent) 4-21
MIN/MAX 4-22
Null 4-23
Limits test 4-24
MX+B 4-25
dB 4-26
dBm 4-27
Other system-related operations 4-29
Display 4-29
Beeper 4-30
Reading memory (store and recall) 4-31
Sensitivity band (Hold) 4-33
Initial mode 4-34
Language 4-35
Error condition 4-35
Firmware revision 4-36
Calibration 4-40

5 Remote Interface Operations 5-1
Introduction 5-2
Pass/fail output from the USB connector 5-2
Setting up the remote interface 5-2
Remote interface commands 5-3
Common commands 5-3
Other measurement configuration commands 5-7
Math operation commands 5-7
Triggering 5-8
Triggering commands 5-8
System-related commands 5-9
Status reporting commands 5-9
Other interface commands 5-10

6 Error Messages 6-1
Introduction 6-2
Execution errors 6-2

Appendix	Topic	Page

A **Specifications** A-1

B **Remote Interface Reference** B-1
An introduction to SCPI language B-2
Command format used in this manual B-2
SCPI parameter types B-4
Output data formats B-5
The MEASure? command B-6
The CONFigure command B-7
The measurement configuration command B-9
The math operation command B-14
The triggering commands B-17
The system-related commands B-18
Other interface commands B-20
Status reporting commands B-20
Model 2100-specific SCPI compliance information B-22
IEEE-488 compliance information B-24
About application programs B-24
Visual Basic 6 programming example 1: MEASure.bas B-24
Visual Basic programming example 2: CONFigure B-27
Visual C++ programming example: DEVQUERY B-29

Index I-1

This page left blank intentionally.

List of Figures

Section	Figure	Title	Page
1	Figure 1-1	The Model 2100 6 1/2-Digit Resolution Digital Multimeter	1-2
2	Figure 2-1	Moving the handle to an upright position	2-2
	Figure 2-2	Removing the handle from the multimeter	2-3
	Figure 2-3	Default handle position	2-3
	Figure 2-4	Operation handle position	2-4
	Figure 2-5	Carrying position	2-4
	Figure 2-6	Disconnecting AC power	2-5
	Figure 2-7	Opening the voltage setting selector	2-5
	Figure 2-8	Removing the red voltage selector fuse holder	2-6
	Figure 2-9	Inserting the voltage selector	2-7
	Figure 2-10	Powering-off the multimeter	2-7
	Figure 2-11	Plugging in the power cord	2-8
	Figure 2-12	Switching on the power	2-8
	Figure 2-13	Disconnecting the AC power	2-10
	Figure 2-14	Opening the voltage setting selector	2-10
	Figure 2-15	Removing the red voltage setting selector	2-11
	Figure 2-16	Removing the damaged power line fuse	2-11
	Figure 2-17	Replacing the fuse	2-12
	Figure 2-18	Reinserting the voltage selector	2-12
	Figure 2-19	Current protection using 3A and 7A current input fuses in series	2-13
	Figure 2-20	Disconnecting the AC power	2-14
	Figure 2-21	Releasing the current input terminal fuse holder	2-14
	Figure 2-22	Removing the current input terminal fuse holder	2-15
	Figure 2-23	Removing and replacing the damaged fuse	2-15
	Figure 2-24	Reinserting and securing the current input terminal fuse holder	2-16
	Figure 2-25	Disconnecting the AC power	2-16
	Figure 2-26	Releasing the 7A current input fuse holder on the rear panel	2-17
	Figure 2-27	Removing the 7A current input terminal fuse holder	2-17
	Figure 2-28	Removing and replacing the damaged fuse	2-18
	Figure 2-29	Reinserting and securing 7A current input terminal fuse holder	2-18
	Figure 2-30	Front panel keys and terminals	2-20
	Figure 2-31	The display	2-22
	Figure 2-32	Annunciators at the top	2-22
	Figure 2-33	Annunciators on the right	2-23
	Figure 2-34	The rear panel	2-23

Section	Figure	Title	Page
3	Figure 3-1	Model 2100 DC connections	3-2
	Figure 3-2	Model 2100 AC connections	3-2
	Figure 3-3	Model 2100 rear panel input terminals	3-3
	Figure 3-4	Model 2100 current measurement (front panel)	3-4
	Figure 3-5	Model 2100 current measurement	3-4
	Figure 3-6	Model 2100 2-wire resistance	3-5
	Figure 3-7	Model 2100 4-wire resistance	3-5
	Figure 3-8	Model 2100 rear panel 2-wire resistance measurement	3-5
	Figure 3-9	Model 2100 rear panel 4-wire resistance measurement	3-6
	Figure 3-10	Model 2100 2-wire resistance / continuity	3-7
	Figure 3-11	Model 2100 general purpose diode	3-8
	Figure 3-12	Theory diagram of 2-wire RTD measurement	3-9
	Figure 3-13	Theory diagram of 3-wire RTD measurement	3-9
	Figure 3-14	Theory diagram of 4-wire RTD measurement	3-10
4	Figure 4-1	Setting Auto Zero and Auto Gain from the front panel	4-3
	Figure 4-2	Setting the AC Filter using the front panel	4-5
	Figure 4-3	Front panel resolution	4-7
	Figure 4-4	Front panel DCV	4-8
	Figure 4-5	Front panel threshold resistance	4-9
	Figure 4-6	Front panel auto-range	4-10
	Figure 4-7	Front panel input switch terminals	4-13
	Figure 4-8	Trigger operation flow chart	4-14
	Figure 4-9	Toggle auto triggering on and off	4-15
	Figure 4-10	Single trigger	4-16
	Figure 4-11	Trig submenu	4-17
	Figure 4-12	Reading hold	4-18
	Figure 4-13	Setting delay time from the front panel	4-19
	Figure 4-14	Making a Ratio measurement from the front panel	4-20
	Figure 4-15	Making a percent measurement from the front panel	4-21
	Figure 4-16	Using MIN/MAX from the front panel	4-22
	Figure 4-17	Using the NULL function from the front panel	4-23
	Figure 4-18	Configuring the Limits function from the front panel	4-24
	Figure 4-19	Making a limits test from the front panel	4-25
	Figure 4-20	Using the MX+B function from the front panel	4-26
	Figure 4-21	Setting the relative reference value	4-27
	Figure 4-22	Making a dB measurement from the front panel	4-27
	Figure 4-23	Setting the reference resistance from the front panel	4-28
	Figure 4-24	Making a dBm measurement from the front panel	4-29
	Figure 4-25	The Model 2100 dot-matrix display screen	4-29
	Figure 4-26	Controlling the display from the front panel	4-30
	Figure 4-27	Controlling the beeper from the front panel	4-31
	Figure 4-28	Storing readings from the front panel	4-32
	Figure 4-29	Recalling readings from the front panel	4-33
	Figure 4-30	Adjusting the sensitivity band from the front panel	4-34
	Figure 4-31	Saving or restoring default settings	4-35
	Figure 4-32	Selecting a language	4-35
	Figure 4-33	Checking the error queue	4-36
	Figure 4-34	Checking the firmware revision	4-37
	Figure 4-35	Installing the Model 2100 firmware update	4-37
	Figure 4-36	The Open dialog box	4-38
	Figure 4-37	Model 2100 firmware upgrade in progress	4-38
	Figure 4-38	Restart device to complete update message	4-39
	Figure 4-39	Viewing calibration information	4-40

List of Tables

Section	Table	Title	Page
2	Table 2-1	Available voltage setting selectors for local line power requirements	2-6
	Table 2-2	Factory default	2-18
4	Table 4-1	Relationship of resolution to Auto Gain	4-3
	Table 4-2	AC filters default settings	4-4
	Table 4-3	Default factors	4-11
	Table 4-4	Default measurements	4-18
	Table 4-5	Valid values of Save Data	4-34
5	Table 5-1	USB connector pin out and designations	5-2
6	Table 6-1	Execution error codes	6-2

This page left blank intentionally.

Section 1

General Information

In this section:

Topic	Page
Introduction	1-2
Feature overview	1-2
Specifications	1-3
Manual addenda	1-3
Precautions for operation	1-3
Upkeep of the Model 2100	1-3
Safety information	1-4
Safety symbols and terms	1-4
Inspection for damage	1-4
Shipment contents	1-5
Instruction manual	1-5
Repacking for shipment	1-5

Introduction

This section contains general information about the Keithley Instruments Model 2100 6 1/2-Digit Resolution Digital Multimeter. The information is organized as follows:

- Feature overview
- Manual addenda
- Precautions for operation
- Upkeep of the Model 2100
- Safety information
- Inspection for damage
- Shipment contents
- Instruction manual
- Repacking for shipment

If you have any questions after reviewing this information, please contact your local Keithley Instruments representative or call one of our Applications Engineers at 1-888-KEITHLEY (1-888-534-8453). You can also contact us through our website at www.keithley.com.

Feature overview

Figure 1-1
The Model 2100 6 1/2-Digit Resolution Digital Multimeter

The Keithley Instruments Model 2100 is a rugged and versatile 6 1/2-digit resolution digital multimeter. It has 0.003% one-year basic DC voltage accuracy at 10V range and 0.005% one-year basic resistance accuracy at 10kΩ range. At 6 1/2 digits, the multimeter delivers 50 triggered RDGS/sec via the USB remote interface. At the fast 4 1/2-digit setting, it reads over 2000 RDGS/sec into its internal buffer.

- Resolution: 6 1/2 digits
- 5x7 dot-matrix VFD, dual displays with 3-color annunciators
- Eleven standard measurement functions and eight math functions
- Stability, accuracy, and speed
- Built-in USB interfaces
- DC voltage: 0.1V, 1V, 10V, 100V, and 1000V
- AC voltage: 0.1V, 1V, 10V, 100V, and 750V
- DC current: 10mA, 100mA, 1A, and 3A
- AC current: 1A, and 3A
- Two and 4-wire resistance: 100Ω, 1KΩ, 10KΩ, 100KΩ, 1MΩ, 10MΩ, and 100MΩ

- Frequency: From 3Hz to 300kHz
- Period measurement
- Diode measurement
- Continuity measurement for resistance

Some additional capabilities of the Model 2100 include:

- Temperature measurement using RTDs
- Full math functions: dB, dBm, MX+B, ratio, percentage, Max/Min, null, and limits
- TMC compliant USB remote control interface for PC control
- Microsoft® Office Word, and Excel add-in tools for remotely storing and recalling the measured values from these applications

Specifications

Refer to Appendix A of this manual for complete Model 2100 specifications. Check the Keithley Instruments website at www.keithley.com for the latest updates to the specifications.

Manual addenda

Any improvements or changes concerning the Model 2100 or manual will be explained in an addendum included with the manual. Be sure to note these changes and incorporate them into the manual.

Precautions for operation

- Please carefully read the manual before operating this device.
- This manual is for reference only. Please consult your local service representative for further assistance.
- The contents of this manual may be amended by the manufacturer without notice.
- Never allow unauthorized personnel to dismantle the equipment, or equipment may be damaged.
- The equipment has been strictly tested for quality before delivery from our factory.
- Do not use the meter around explosive gas or flammable vapors.
- The patent and related documents for the equipment belong to Keithley Instruments, Inc. and may not be used by others without permission.

Upkeep of the Model 2100

- Although the Model 2100 multimeter is very durable and weather resistant, care should be taken not to expose it to severe impacts or forces.
- Keep the Model 2100 away from water and damp environments.
- Calibration should be performed every year. Please contact your local service representative for more information.
- If an incorrect display or abnormal beeps occur, you should stop using the equipment at once and contact your local service representative.
- Wipe the surface of the Model 2100 multimeter with a dry or damp clean cloth to dust and clean any residue from the enclosure.

Safety information

WARNING ***To avoid possible electric shock, personal injury, or death, please read and follow these guidelines carefully:***

- ***Follow the guidelines in this manual and DO NOT use the meter if the case is damaged. Check the meter case and terminals, and make sure all the devices are in the proper positions.***
- ***Do not apply excessive voltage to the multimeter. Apply voltage within the rated range only.***
- ***Use caution when measuring voltages above 30V RMS, 42V peak, or 60V DC. Higher voltages pose an electric shock hazard.***
- ***When using the probes, always keep your fingers behind the finger guards.***
- ***Always connect the common test leads (black) before connecting the live test leads (red), and disconnect the live test leads (red) before disconnecting the common test leads (black). This will reduce the chance of an electric shock.***
- ***Disconnect circuit power and discharge all high-voltage capacitors before testing resistance, continuity, diodes, or capacitance.***
- ***Repairs must only be performed by qualified service personnel.***
- ***When replacing fuses, use only the same type and same rating as specified. Make sure the unit is disconnected from AC power and any external signals first.***
- ***Do not try to operate the meter if it is damaged. Disconnect the power from the equipment and consult your local service representative. Return the product to a Keithley Instruments service facility if necessary.***

Safety symbols and terms

The following symbols and terms may be found on the Model 2100 or used in this manual.

The ⚠ symbol indicates that the user should refer to the operating instructions located in the manual.

The ⚠ symbol shows that high voltage may be present on the terminal(s). Use standard safety precautions to avoid personal contact with these voltages.

Inspection for damage

The Model 2100 was carefully inspected electrically and mechanically before shipment. After unpacking all items from the shipping carton, check for any obvious signs of physical damage that may have occurred during transit. Report any damage to the shipping agent immediately. Save the original packing carton for possible future shipment.

Shipment contents

The following items are included with every Model 2100 order:

- One Model 2100 Multimeter unit (112mm/4.4in (H) x 256mm/10.1in (W) x 375/14.75in (D), 4.1Kg/9lbs)
- One power line cord
- One USB cable
- Standard safety test leads
- One CD-ROM (including this electronic User's Manual and software applications)

Instruction manual

A CD-ROM containing this User's Manual and required software and drivers is included with each Model 2100 order.

Check the Keithley Instruments website at www.keithley.com for the latest revision of the manual. The latest manual can be downloaded (in PDF format) from the website.

Repacking for shipment

Should it become necessary to return the Model 2100 for repair, carefully pack the unit in its original packing carton or the equivalent, and follow these instructions:

- Call the Repair Department at 1-888-KEITHLEY (1-888-534-8453) for a Return Material Authorization (RMA) number.
- Advise as to the warranty status of the Model 2100.
- Write ATTENTION REPAIR DEPARTMENT and the RMA number on the shipping label.

Complete and include the Service Form located at the back of this manual.

This page left blank intentionally.

Section 2

Getting Started

In this section:

Topic	Page
Overview	2-2
Setting up the Model 2100 Digital Multimeter	2-2
Adjusting the handle	2-2
Setting the line voltage	2-4
Connecting the power	2-7
Changing the fuses	2-9
Factory default settings	2-18
Model 2100 familiarization	2-19
The front panel	2-19
The display	2-21
The rear panel	2-23

Overview

This section will give you an overview of the Keithley Instruments Model 2100 6 1/2-Digit Resolution Multimeter's basic features and guide you through the basics of the Model 2100.

Setting up the Model 2100 Digital Multimeter

The purpose of this section is to prepare you to use the Model 2100 Digital Multimeter (DMM). You should check whether you have all the parts needed to operate your multimeter. All Keithley Instruments products are handled and inspected professionally before shipping out to our customers. If you find any damaged or missing parts, please contact your local service representative immediately. Do not attempt to operate a damaged product; if you have any doubt about the condition of your Model 2100, please contact your local service representative.

Adjusting the handle

You may adjust the carrying handle to suit your needs. Figures 2-1, 2-2, 2-3, 2-4, and 2-5 show you how to adjust the handle.

Removing the handle

Step 1: Move the handle to an upright position.

Pull slightly outward on both sides of the handle, and slowly rotate it up as shown in Figure 2-1.

Figure 2-1
Moving the handle to an upright position

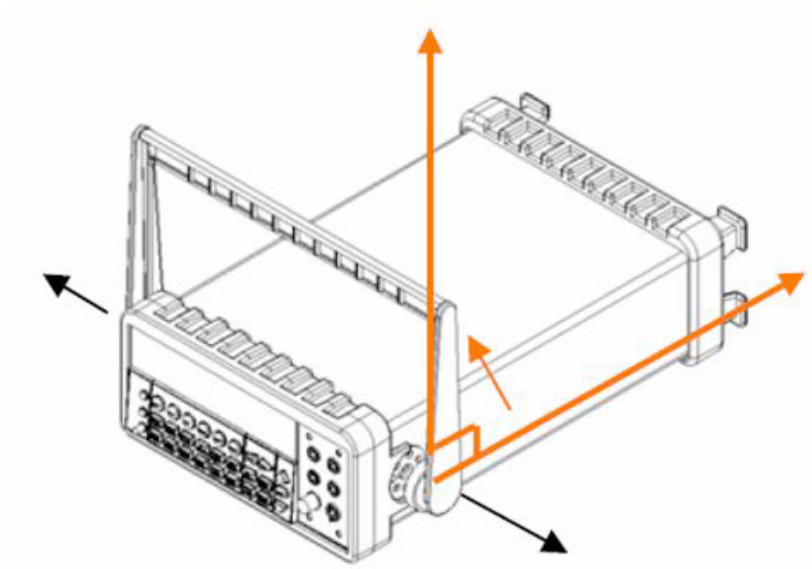

Step 2: Remove the handle

When the handle is turned up to a 90° angle with the multimeter, pull it away from the multimeter (refer to Figure 2-2).

Figure 2-2
Removing the handle from the multimeter

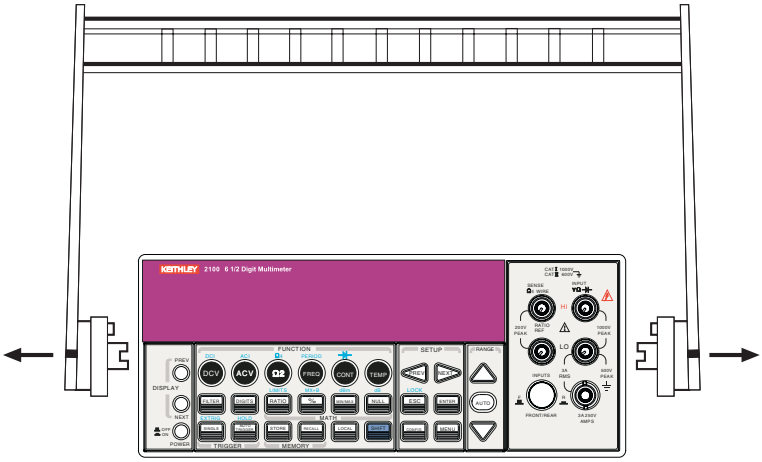

Adjusting the handle position

You can adjust the Model 2100's handle to suit your needs:

Position 1: Default

The default position is used for packing the Model 2100 (refer to Figure 2-3).

Figure 2-3
Default handle position

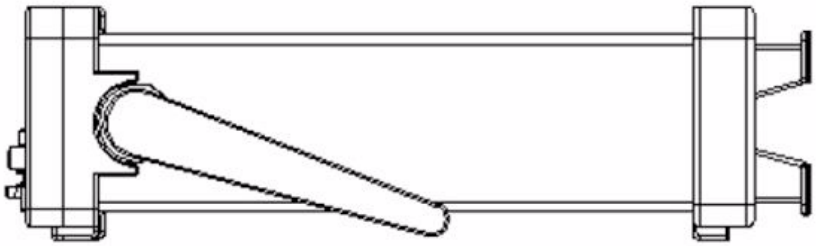

Position 2: Operating

The adjusted handle position shown in Figure 2-4 is for multimeter operation.

Figure 2-4
Operation handle position

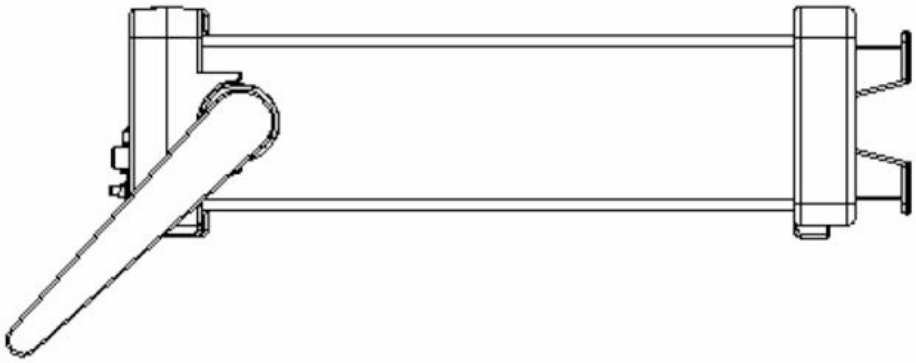

Position 3: Carrying

The carrying position is shown in Figure 2-5.

Figure 2-5
Carrying position

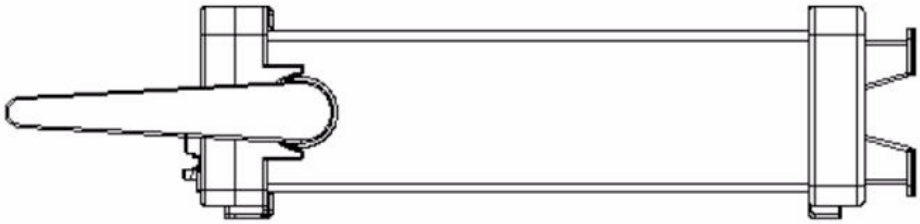

Setting the line voltage

WARNING ***Before changing the setting, ensure that the multimeter is disconnected from the AC power.***

Step 1: Disconnect AC power

Verify that the meter is disconnected from AC power as shown in Figure 2-6.

Figure 2-6
Disconnecting AC power

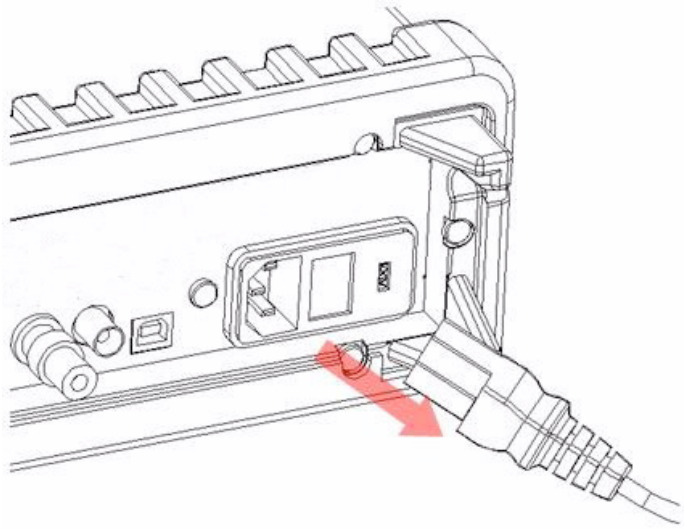

Step 2: Open the voltage setting selector

Open the voltage setting selector cap as shown in Figure 2-7 (a flat blade screwdriver may be required).

Figure 2-7
Opening the voltage setting selector

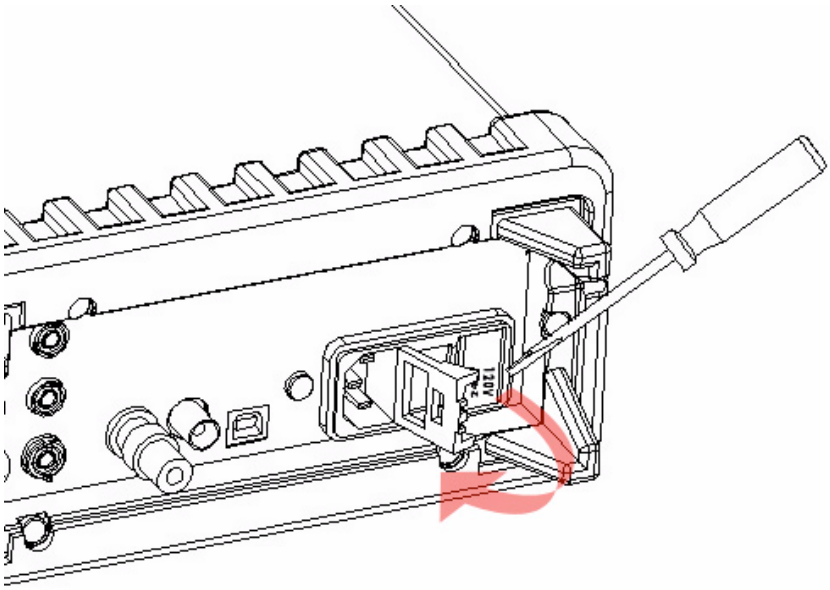

Step 3: Remove the red voltage setting selector

Remove the red voltage selector fuse holder from the right middle seam as shown in Figure 2-8 (a flat blade screwdriver may be required).

Figure 2-8
Removing the red voltage selector fuse holder

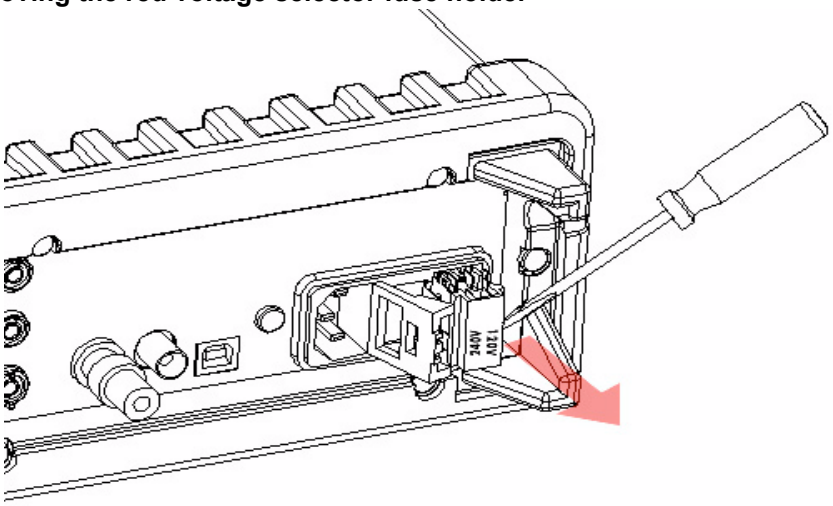

Step 4: Change the voltage setting

Turn the voltage setting to the correct setting.

NOTE *To accommodate differing local area power requirements, Keithley Instruments has three available models of voltage setting selectors for the Model 2100 (each with two voltage settings). The voltage setting selector included with your Model 2100 should have the appropriate voltage settings for your area's line power requirements. If you do not have the correct voltage setting selector, please contact your local Keithley Instruments representative to request the correct model (see Table 2-1, below).*

Table 2-1
Available voltage setting selectors for local line power requirements

Model number	Voltage select options	Voltage set to:
2100/120	120/240	120
2100/230-240	120/240	240
2100/220	120/220	220

Step 5: Insert the voltage selector

Insert the voltage setting selector back into the socket and close the cap as shown in Figure 2-9.

Figure 2-9
Inserting the voltage selector

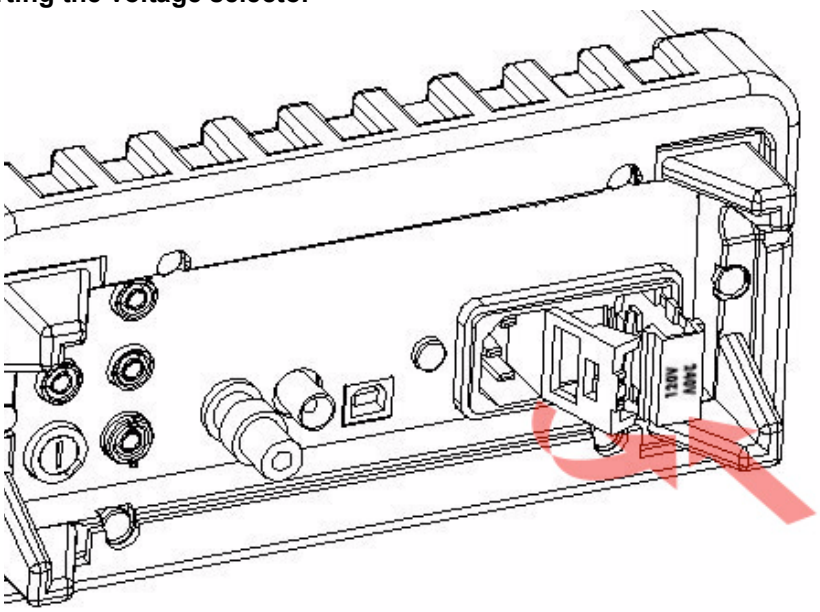

Connecting the power

Power-off the multimeter

Ensure that the power switch on the front panel is in the "POWER OFF" position before plugging the Model 2100 in (refer to Figure 2-10).

Figure 2-10
Powering-off the multimeter

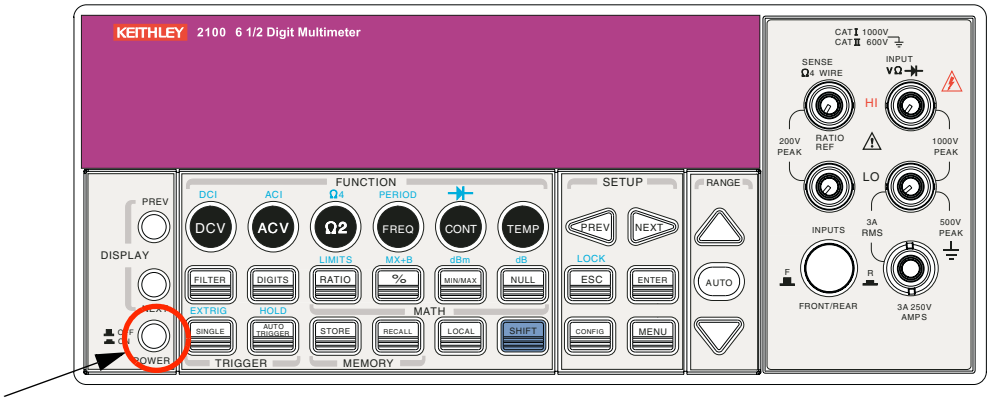

Plug-in the power cord

After finishing the above procedures, you can plug-in your power cord as shown in Figure 2-11.

Figure 2-11
Plugging in the power cord

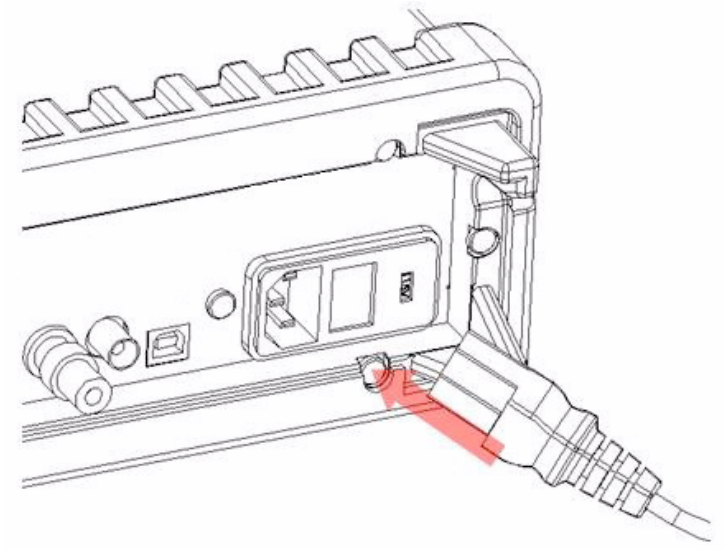

Switch the power on

Press the power switch on the front panel to activate the Model 2100 as shown in Figure 2-12.

Figure 2-12
Switching on the power

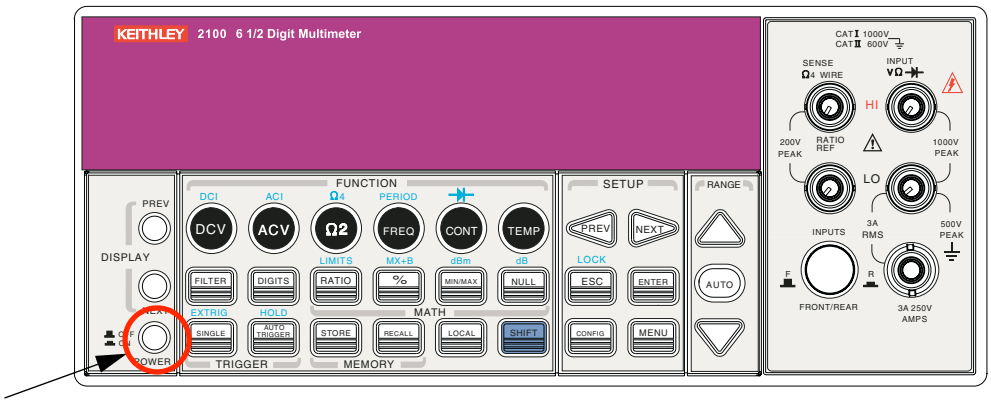

Check the power-line voltage on the rear panel to see if the voltage setting is correct for your area. Change the setting if it is not correct by following the steps in "Setting the line voltage" later in this section.

WARNING ***Before connecting power to the Model 2100, ensure that the fuse is intact. Refer to "Changing the fuses" later in this section if the fuse is open/blown.***

WARNING ***The main power input voltage to the unit must be selected correctly according to the local installation's power supply. Check the voltage indication window on the power module at the back of the unit to verify the voltage setting is correctly set. If the voltage is not correctly set, refer to "Setting the line voltage" below.***

WARNING ***The power cord supplied with the Model 2100 contains a separate ground wire for use with grounded outlets. When proper connections are made, the instrument chassis is connected to power line ground through the ground wire in the power cord. Failure to use a grounded outlet may result in personal injury or death due to electric shock.***

Changing the fuses

WARNING ***Before replacing the power-line fuse or current input fuses, verify that the multimeter is disconnected from AC power. You must be qualified personnel to perform this action.***

CAUTION **For continued protection against fire or instrument damage, only replace the fuses with the same type and rating. If the instrument repeatedly blows fuses, have the unit serviced at an authorized repair facility.**

Power line fuse

A power-line fuse located next to the AC receptacle (in the voltage setting selector) protects the power line input of the instrument. Verify that the power-line fuse is good and replace it with a new one if it is damaged. The Model 2100 is shipped from the factory with a 0.25A/250V, 5×20mm slow-blow glass fuse installed (Keithley Instruments part number FU-96-4). This is the correct fuse type for all line voltage settings; use only this type of replacement fuse.

To change the power line fuse:

Step 1: Disconnect the AC power

Verify that the meter is disconnected from AC power as shown in Figure 2-13.

Figure 2-13
Disconnecting the AC power

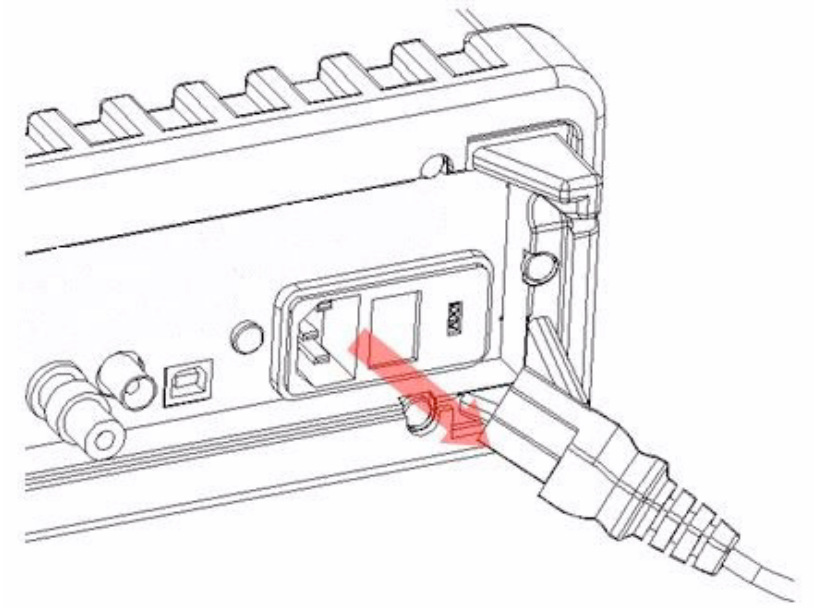

Step 2: Open the voltage setting selector

Open the voltage setting selector cap as shown in Figure 2-14 (you will need a screwdriver to do so).

Figure 2-14
Opening the voltage setting selector

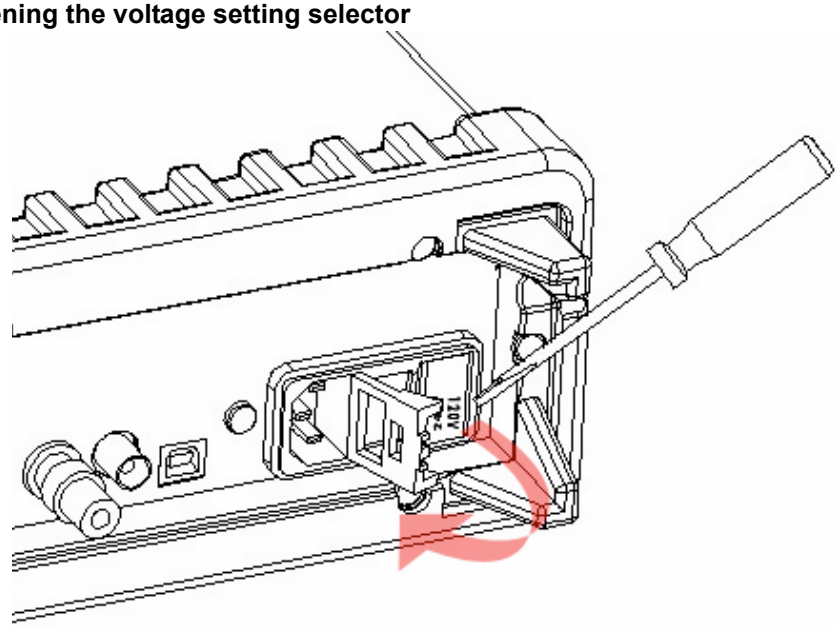

Step 3: Remove the red voltage setting selector

Remove the red voltage setting selector from the right middle seam as shown in Figure 2-15 (you might need a screwdriver to do so).

Figure 2-15
Removing the red voltage setting selector

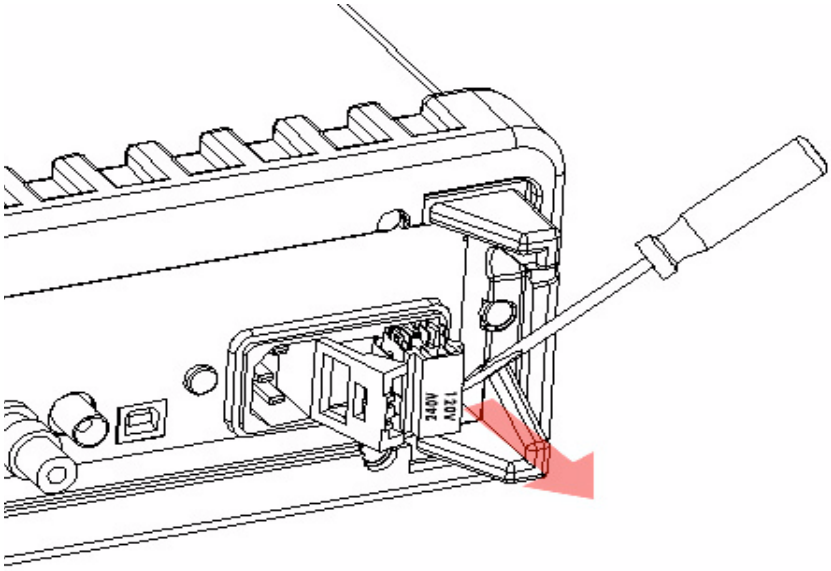

Step 4: Remove the damaged power line fuse

Remove the damaged fuse from the selector as shown in Figure 2-16.

Figure 2-16
Removing the damaged power line fuse

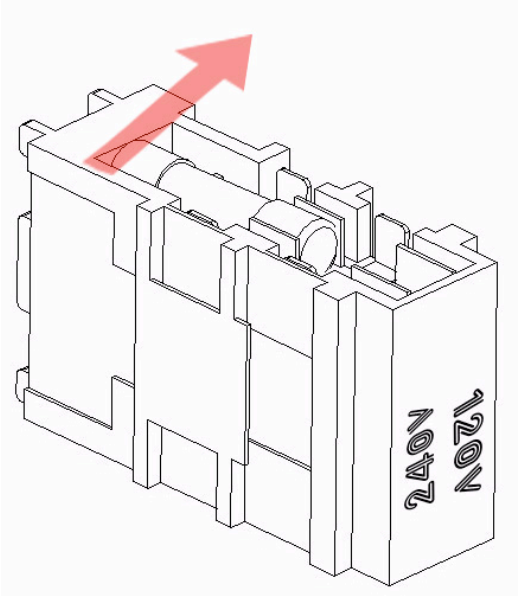

Step 5: Replace the power line fuse

Replace with the new fuse as shown in Figure 2-17.

Figure 2-17
Replacing the fuse

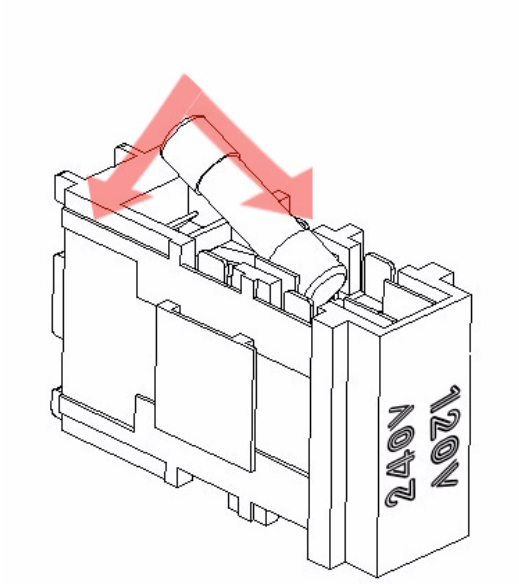

Step 6: Reinsert the voltage selector

Insert the voltage setting selector back into the socket and close the cap as shown in Figure 2-18.

CAUTION **Verify that the correct voltage setting appears in the red voltage selection window in the power module before powering up the unit. Refer to "Connecting the power" earlier in this section for instructions on how to correctly power up the unit.**

Figure 2-18
Reinserting the voltage selector

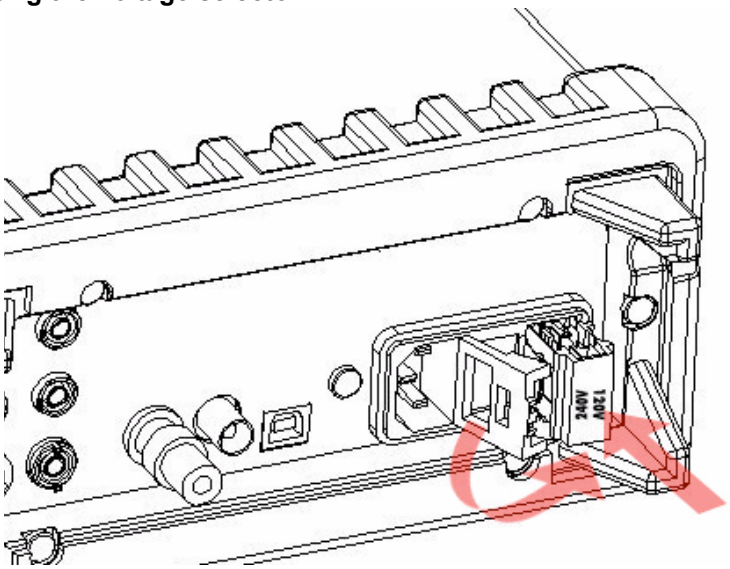

Current input fuses

The Model 2100 has two 3A fuses in the front and rear current input terminals, and an additional 7A fuse in series with either the front or rear current input fuse (depending on the front or rear panel switch position) for added protection against a strong current pulse. If a strong current pulse overloads the 7A fuse, it will blow quickly, thus saving the 3A fuse and the instrument's internal circuitry (see Figure 2-19).

Figure 2-19
Current protection using 3A and 7A current input fuses in series

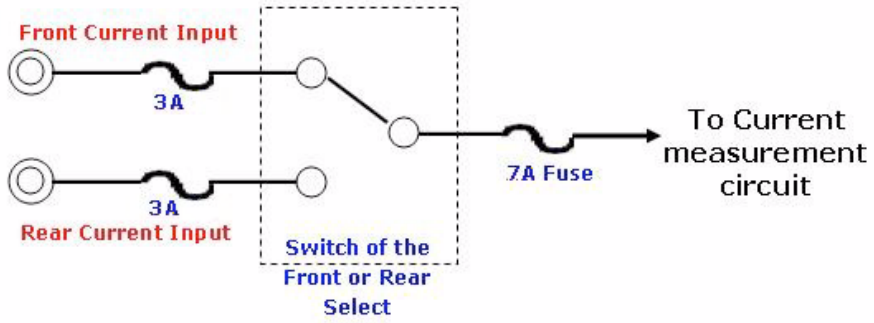

The two main fuses located in the front and rear current input terminals of your Model 2100 are 3A, 250V, 5x20mm fast-acting glass fuses (Keithley Instruments part number FU-99-1). The additional current input fuse is a 7A, 250V, 5x20mm fast-acting ceramic tube fuse. See the following text for instructions on how to replace these fuses if they become damaged.

To change the 3A front or rear panel current input terminal fuses:

WARNING ***Before replacing the power line fuse or current input fuses, verify that the multimeter is disconnected from AC power. You must be qualified personnel to perform this procedure.***

CAUTION **For continued protection against fire or instrument damage, only replace the fuses with the same type and rating. If the instrument repeatedly blows fuses, have the unit serviced at an authorized repair facility.**

NOTE *Instructions for replacing the front panel current input terminal fuse are depicted here; the rear panel current input terminal fuse can be changed using the same procedure.*

Step 1: Disconnect the AC power

Verify that the meter is disconnected from AC power, as shown in Figure 2-20.

Figure 2-20
Disconnecting the AC power

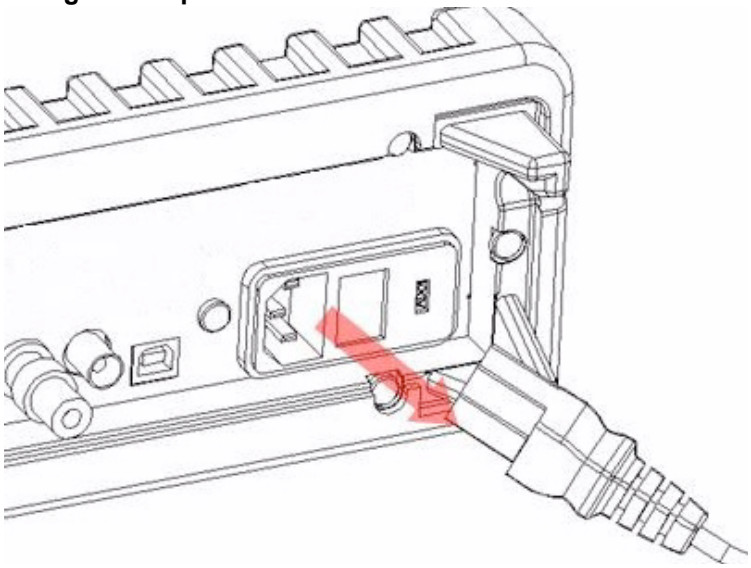

Step 2: Release the current input terminal fuse holder

Push the current input terminal in and turn it to the right (see Figure 2-21) to release it.

Figure 2-21
Releasing the current input terminal fuse holder

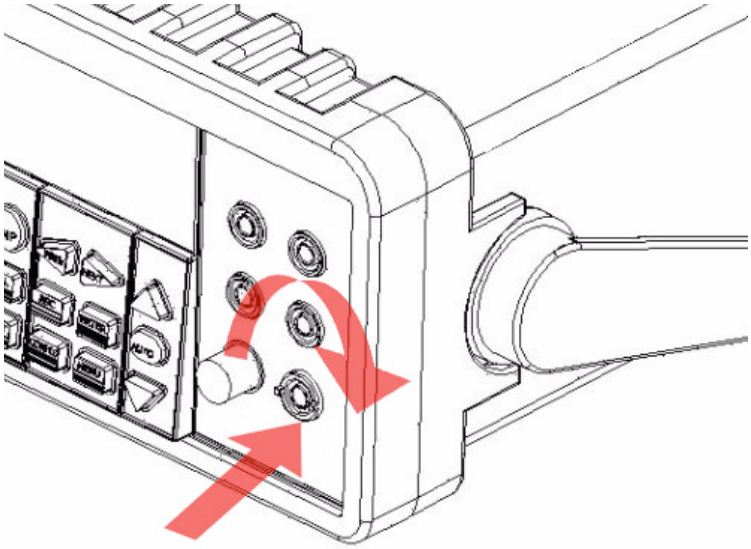

Step 3: Remove the current input terminal fuse holder

Gently pull out the current input terminal fuse holder to expose the current input fuse (see Figure 2-22).

Figure 2-22
Removing the current input terminal fuse holder

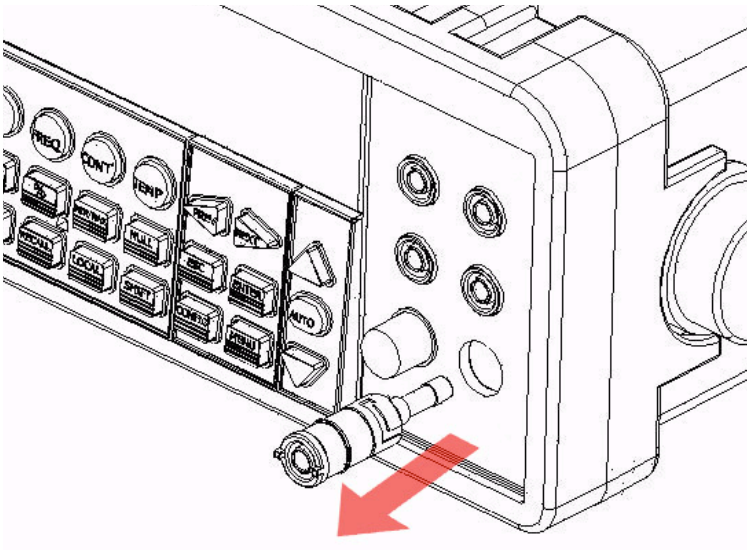

Step 4: Remove and replace the damaged fuse

Remove the damaged fuse and replace it with the same type and rating of fuse (see Figure 2-23).

Figure 2-23
Removing and replacing the damaged fuse

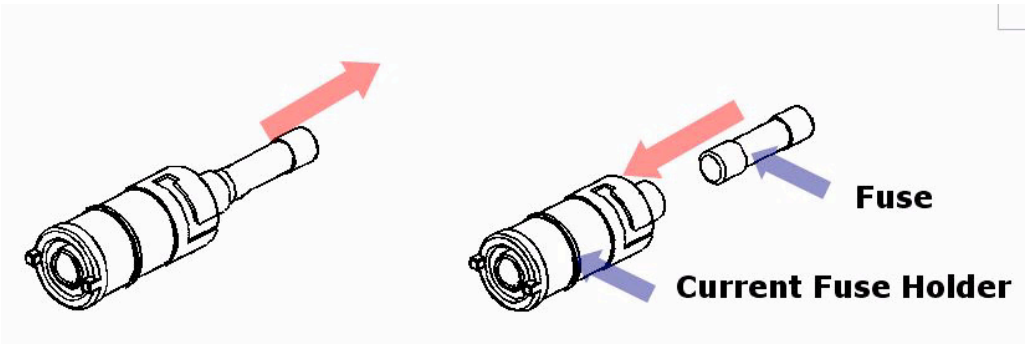

Step 5: Reinsert and secure the current input terminal fuse holder

Reinsert the current input terminal fuse holder, turning it to the left as you push it in (see Figure 2-24). Ensure that the fuse holder is properly seated and secured.

Figure 2-24
Reinserting and securing the current input terminal fuse holder

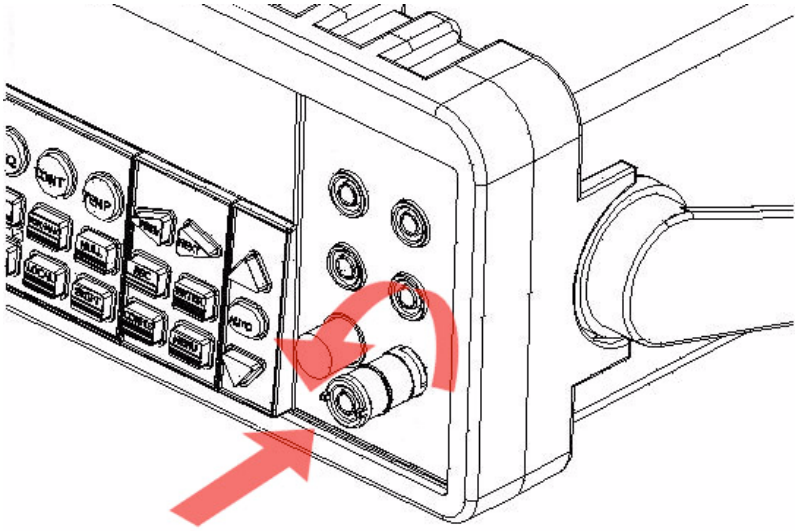

WARNING ***Before reconnecting the power line cord to your multimeter, make sure that the power switch is in the "POWER OFF" position.***

To change the 7A current input fuse on the rear panel:

Step 1: Disconnect the AC power

Verify that the meter is disconnected from AC power, as shown in Figure 2-25.

Figure 2-25
Disconnecting the AC power

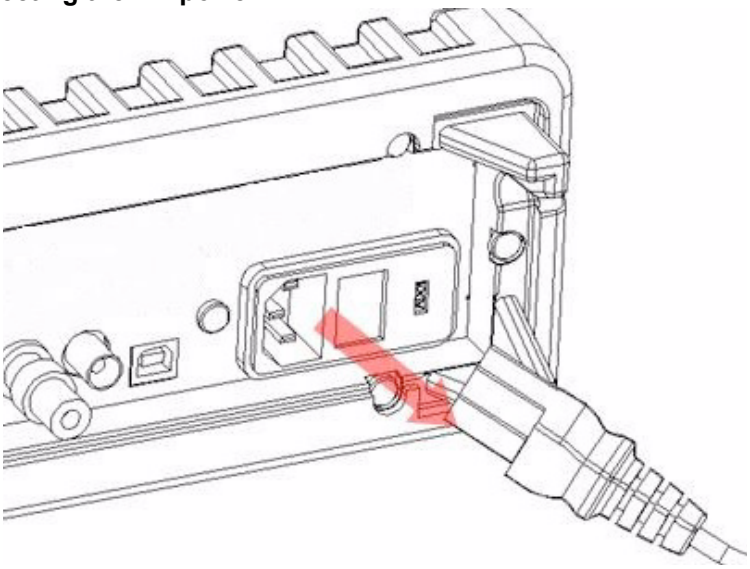

Step 2: Release the current input terminal fuse holder

Using a flat-blade screwdriver, turn the 7A current input fuse holder on the rear panel to the left until it is released (see Figure 2-26).

Figure 2-26
Releasing the 7A current input fuse holder on the rear panel

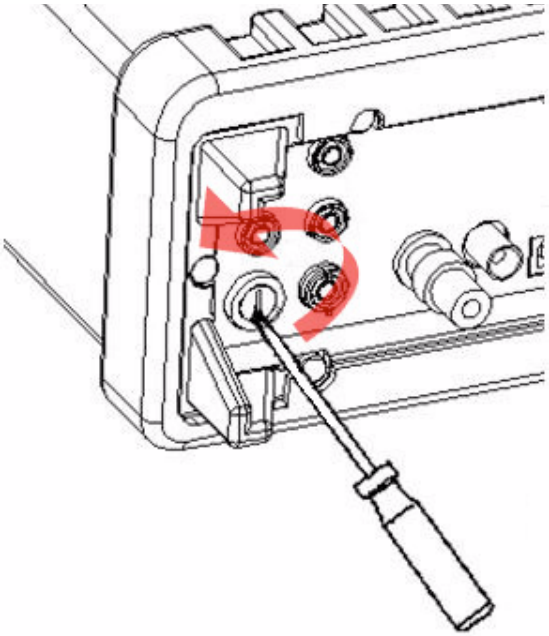

Step 3: Remove the current input terminal fuse holder

Gently pull out the current input terminal fuse holder to expose the 7A current input fuse (see Figure 2-27).

Figure 2-27
Removing the 7A current input terminal fuse holder

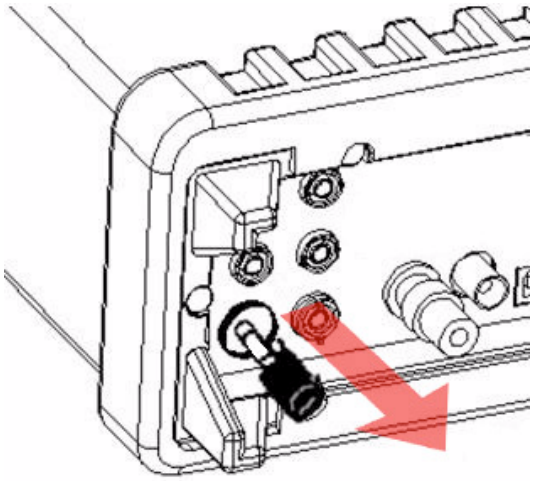

Step 4: Remove and replace the damaged fuse

Remove the damaged fuse and replace it with the same type and rating of fuse (see Figure 2-28).

Figure 2-28
Removing and replacing the damaged fuse

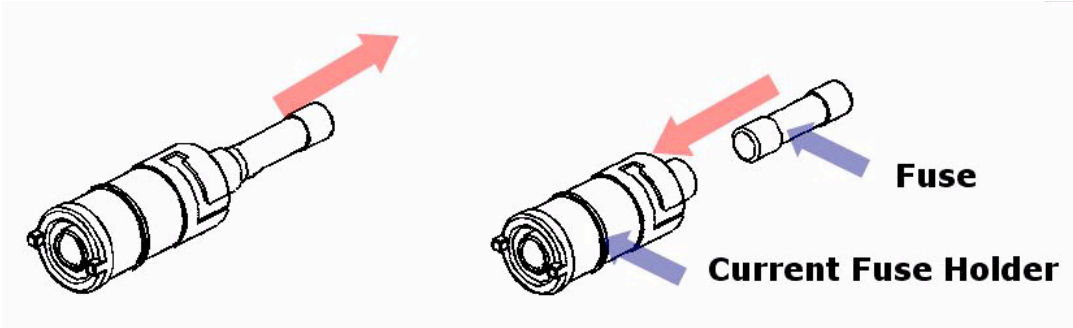

Step 5: Reinsert and secure the 7A current input terminal fuse holder

Reinsert the 7A current input terminal fuse holder, turning it to the right as you push it in (see Figure 2-29). Ensure that the fuse holder is properly seated and secured.

Figure 2-29
Reinserting and securing the 7A current input terminal fuse holder

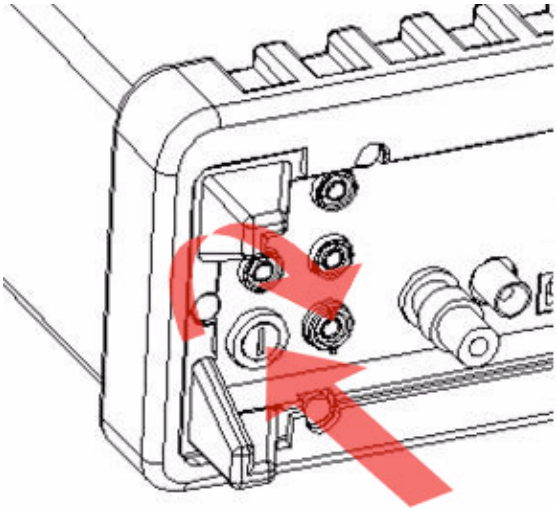

WARNING ***Before reconnecting the power line cord to your multimeter, ensure that the power switch is in the "POWER OFF" position.***

Factory default settings

Table 2-2 shows the factory default settings for the Model 2100.

Table 2-2
Factory default

Function		Default
Function		DCV
Autozero		On
Frequency and period source		AC voltage
Output format		ASCII
Ratio		Off
AC bandwidth	Input frequency	20Hz

Table 2-2
Factory default

Function		Default
Function		DCV
Voltage	AC digits	5.5
	DC digits	Slow 5.5 (1 PLC)
	Range	Auto
Current	AC digits	5.5
	DC digits	slow 5.5 (1 PLC)
	Range	Auto
Frequency and period	AC digits	5.5
	Range	Auto
	Rate	Medium (100ms)
Diode Test	Digits	5.5
	Range	1mA
	Rate	0.1 PLC
Resistance (2-wire)	Digits	Slow 5.5 (1 PLC)
	Range	Auto
Triggers	Source	Immediate
	Delay	Auto
Input Resistance		10MΩ

Model 2100 familiarization

The Model 2100 6 1/2-Digit Resolution Digital Multimeter consists of three major parts: the front panel, the display, and the rear panel. Following is a discussion of these components.

The front panel

The keys and terminals on the front panel are divided into the following groups (refer to Figure 2-30):

- **DISPLAY** and **POWER**
- **FUNCTION**, **MATH**, **TRIGGER**, **MEMORY**, **SETUP**, **RANGE**, and **INPUT TERMINALS**
- **FILTER, DIGITS, LOCAL,** and **SHIFT**

Figure 2-30
Front panel keys and terminals

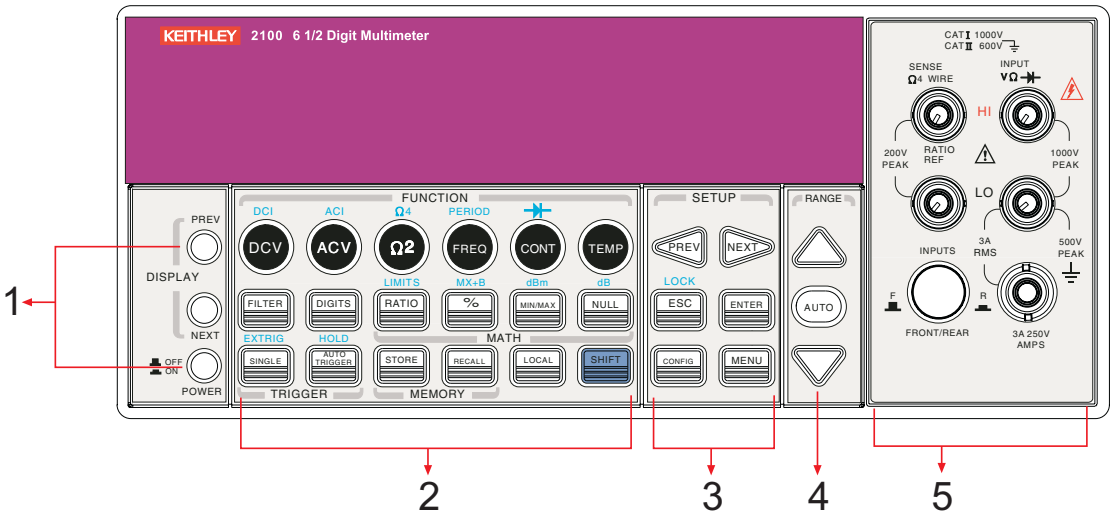

1. **DISPLAY** and **POWER** keys:
   i. **DISPLAY**: Shows model, version and condition by pressing the **PREV** and **NEXT** keys
   ii. **POWER**: Activates the Model 2100 digital multimeter
2. **FUNCTION** keys:
   a. First row without **SHIFT** key:
      i. **DCV**: Selects DC voltage measurement
      ii. **ACV**: Selects AC voltage measurement
      iii. **Ω2**: Selects 2-wire resistance measurement
      iv. **FREQ**: Selects frequency measurement
      v. **CONT**: Selects the continuity test
   b. First row with **SHIFT** key:
      i. **DCI**: Selects DC current measurement
      ii. **ACI**: Selects AC current measurement
      iii. **Ω4**: Selects 4-wire resistance measurement
      iv. **PERIOD**: Selects period measurement
      v. **→|–**: Selects diode testing
   c. Second row without **SHIFT** key:
      i. **FILTER**: Enables or disables the digital filter
      ii. **DIGITS**: Changes the resolution
      iii. **RATIO**: Enables the dcv:dcv ratio function
      iv. **%**: Calculates the ratio to a target value in percentage
      v. **MIN/MAX**: Captures the minimum or maximum readings from the measurement
      vi. **NULL**: Activates the offset function in order to get the real measured reading
   d. Second row with **SHIFT** key:
      i. **LIMITS**: Used for setting upper and lower limit values for readings
      ii. **MX+B**: Used for calculating slope. **X** is the normal display reading; **M** and **B** are constants specified by user for scale factor and offset
      iii. **dBm**: Used for displaying voltage measurement in dBm power unit
      iv. **dB**: Used for displaying voltage measurement in decibel unit
   e. Third row without **SHIFT** key:

i. **SINGLE**: Manually triggers the multimeter to make measurements
ii. **AUTO TRIGGER**: Instructs the multimeter to make measurements continuously
iii. **STORE**: Stores a specified number of subsequent readings
iv. **RECALL**: Displays stored readings. Use the **left** and **right arrow** keys or the **up** and **down arrow** keys to toggle between reading number and reading
v. **LOCAL**: Cancels USB remote mode
vi. **SHIFT** (in blue): Used to select functions that appear on keys in blue uppercase text

f. Third row with **SHIFT** key:
i. **EXTRIG**: Selects external triggers as the trigger source via BNC port on the rear panel
ii. **HOLD**: Holds a reading

3. **SETUP** keys:
a. First row in **SETUP** section:
i. ◀▶: Scrolls through the buffer, conceals or reveals the digits while measuring
b. Second row in **SETUP** section:
i. **ESC**: Cancels selection, moving back to the measurement display
ii. **ENTER**: Accepts selection, moving to next choice or back to the measurement display
iii. **LOCK**: Press **SHIFT** then **ESC** key to prevent unpredictable operation on the panel; to release the lock condition, press ESC again
c. Third row in **SETUP** section:
i. **CONFIG**: Allows setting or adjustment functions relating to some front panel keys
ii. **MENU**: Allows setting or adjustment functions not relating to other front panel keys

4. **RANGE** keys:
i. ▲: Moves to higher range
ii. ▼: Moves to lower range
iii. **AUTO**: Enables or disables auto-range

5. **INPUTS (TERMINALS) toggle button, FUSE** device connection, and inserted connections:
i. ⏚: **TERMINALS** toggle button: Selects input signal connections on front or rear panel
ii. **Input HI and LO:** Used for DCV, ACV, O2, CONT, FREQ, PERIOD, and RTD temperature measurements
AMPS: Used with INPUT LO for DCI and ACI measurements; also holds current fuse for front panel amps input
SENSE HI and LO: Used with INPUT HI and LO for O4 and RTD temperature measurements
iii. **LO** and **I**: Used for making DC and AC current measurements
iv. Front **FUSE**: Secures your meter against damage by strong current pulses (maximum current: 3A, 250V)

The display

The Model 2100 has a 5x7 character dot-matrix, dual-line display with three-color (white, red, and yellow) annunciators for easy viewing. There are two rows in the dual-display screen. The upper row displays both readings and measurement units. A maximum of 13 characters is possible for the upper row dot-matrix display. The lower row displays the range of the measurements and conditions, or information about the current configuration. A maximum of 16 characters is possible

for the lower row dot-matrix display. There are additional annunciators above and on the right side of the display screen that indicate the state or condition of an ongoing measurement. They are explained individually in the following sections.

Figure 2-31
The display

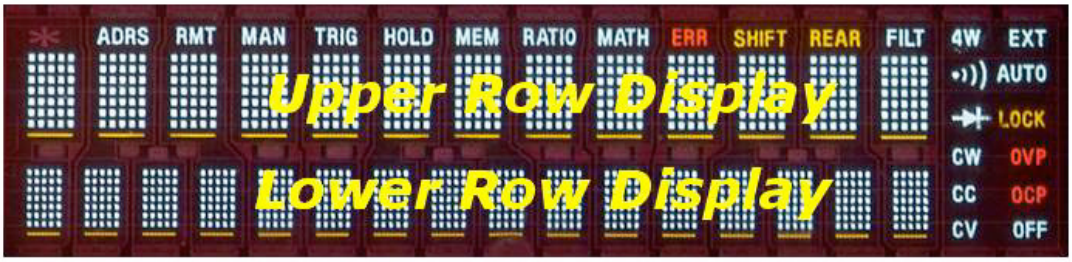

Annunciators at the top

Figure 2-32
Annunciators at the top

- **RMT** (REMOTE)**:** Indicates the remote state (USB Interface)
- **MAN:** Indicates the manual range mode is selected
- **TRIG:** Shows that single triggering is enabled
- **HOLD:** Indicates reading hold function is enabled
- **MEM:** Indicates the use of internal reading memory
- **RATIO:** Indicates the dcv:dcv ratio operation
- **MATH:** Indicates the **MATH** operation is enabled
- **ERR:** Error occurred
- **SHIFT:** Indicates the **SHIFT** button was pressed
- **REAR:** The rear panel input terminal is selected for the measurement
- **FILT:** The digital filter is enabled
- **4W:** Indicates remote sense
- **EXT:** Indicates external trigger

Annunciators on the right

- **4W:** Indicates 4-wire mode is selected for resistance measurement
- •))): Indicates that continuity testing is enabled
- →|–: Indicates the diode testing operation was initiated
- **EXT:** Indicates the **External Trigger** mode is been enabled
- **LOCK:** Indicates the front panel menu operation is locked
- **OFF:** Indicates the front panel display is turned off

Figure 2-33
Annunciators on the right

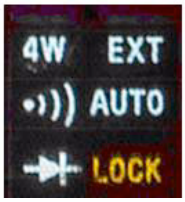

The rear panel

The rear panel of the Model 2100 is shown in Figure 2-34. This figure includes important abbreviated information that should be reviewed before using the instrument.

Figure 2-34
The rear panel

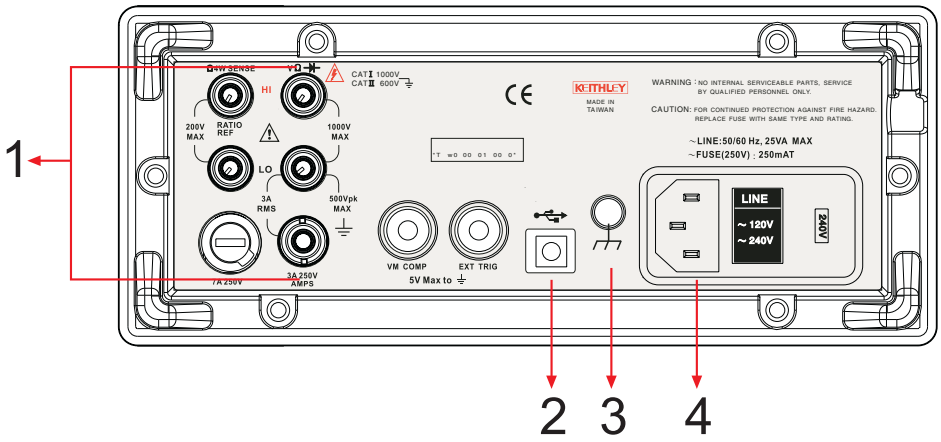

1. **Inserted connections and fuse devices:**
   a. **Input HI and LO:** Used for DCV, ACV, O2, CONT, FREQ, PERIOD, and RTD temperature measurements
   AMPS: Used with INPUT LO for DCI and ACI measurements; also holds current fuse for front panel amps input
   SENSE HI and LO: Use with INPUT HI and LO for O4 and RTD temperature measurements
   b. **LO and I:** Used for making AC and DC current measurements
   c. **Rear fuse:** Secures the meter against damage by strong current pulses
2. **USB connection:**
   a. Connects a remote computer to operate the meter (instead of the front panel control)
3. **Chassis ground terminal**
4. **Power module:**

a. Contains the AC line receptacle, power line fuse, and line voltage setting
   - Configured for line voltages of 120/220V or 120/240V (depending on the power utility in your area)

Section 3

Basic Measurement Functions

In this section:

Topic	Page
Introduction	3-2
Voltage measurements (DC and AC)	3-2
How to measure voltage	3-3
Current measurements (DC and AC)	3-3
How to measure current	3-3
Resistance measurements (2- and 4-wire)	3-4
How to measure resistance	3-6
Frequency and period measurements	3-6
How to measure frequency and period	3-6
Continuity measurements	3-7
How to measure the continuity	3-7
Diode measurements	3-7
How to measure a diode	3-8
RTD measurements	3-8
2-wire RTD measurements	3-8
3-wire RTD measurements	3-9
4-wire RTD measurements	3-10

Introduction

This section introduces some basic measurement functions of the Keithley Instruments Model 2100 6 1/2-Digit Resolution Digital Multimeter®. You will learn how to use the Model 2100 multimeter to measure voltage, current, resistance, frequency, period, continuity, and diode forward voltage.

Voltage measurements (DC and AC)

The ranges for DC voltage (DCV) measurements for the Model 2100 are 100mV, 1V, 10V, 100V, and 1000V. For AC voltage (ACV) measurements, the ranges are 100mV to 750V RMS, or 1000V peak. Figures 3-1 and 3-2 show the locations of the keys needed and message displays for voltage measurement. Figure 3-3 shows the location of the input terminals on the rear panel.

WARNING ***Do not apply more than 1000V (peak) to the Model 2100 multimeter. Applying excess voltage may damage your meter or cause possible electric shock, resulting in personal injury or death.***

NOTE *To eliminate the thermal EMFs due to the differences between two metals, use copper leads to connect your source signal to the meter.*

Figure 3-1
Model 2100 DC connections

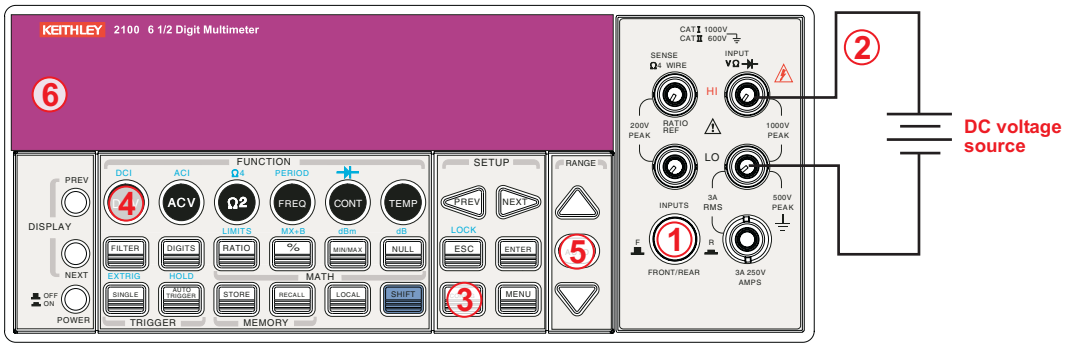

Input resistance = 10MΩ on 1000V and 100V ranges:
> 10GΩ on 10V, 1V, and 100mV ranges.

Figure 3-2
Model 2100 AC connections

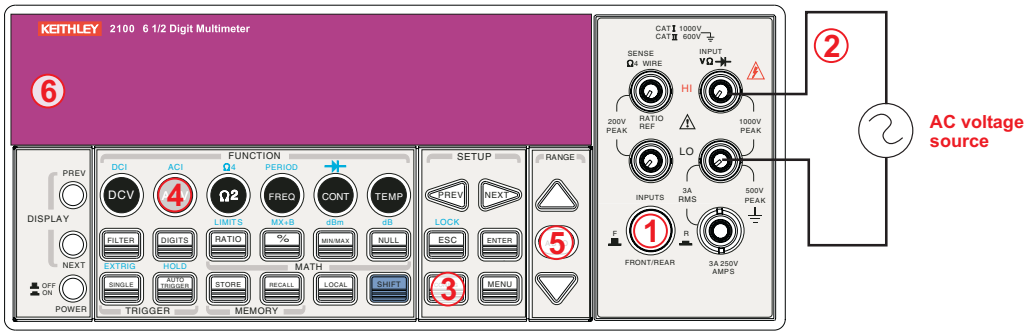

Input Impedence = 1MΩ in parallel with < 100pF
(Warning: Maximum input = 750V RMS, 1000V peak, 8x10' V-Hz)

Figure 3-3
Model 2100 rear panel input terminals

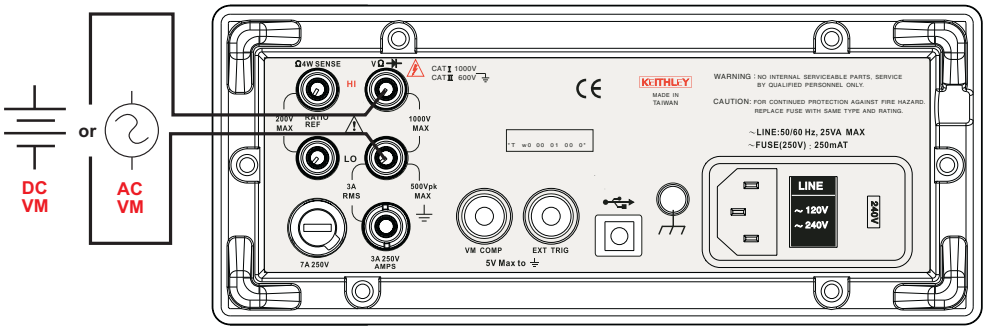

VM = Voltage measurement

NOTE *Follow the same procedure when using either the front or rear panel terminals (refer to Figure 3-3).*

How to measure voltage

1. Select input signal connections on front or rear panel.
2. Connect the test leads to the terminals as shown in Figure 3-1 (DC) or Figure 3-2 (AC).
3. Set the resolution of DCV (refer to "Resolution setting (digits)" in Section 4), bandwidth of ACV (refer to "AC filter" in Section 4) or skip this step if the default settings are used.
4. Press the **DCV** or **ACV** key for DC or AC voltage measurement.
5. Select the auto-range function by pressing the **AUTO** key on the front panel, or use the **up** and **down arrow** keys to select the desired range.
6. Connect the test leads to your source signal and observe the reading shown on the display. If the input signal is beyond the allowed range, an overflow message ("OVLD") will be displayed.

Current measurements (DC and AC)

The ranges for DC current measurements for the Model 2100 are 10mA, 100mA, 1A, and 3A, with a sensitivity of 10NA. For AC current measurements, the range is 1A to 3A RMS with a sensitivity of 10µA. Figures 3-4 and 3-5 illustrate how to measure DC/AC currents with the Model 2100.

CAUTION **The maximum input current allowed is 3A, 250V. Do not apply excess current to your meter to avoid damaging the fuse of current input.**

How to measure current

1. Select input signal connections on front or rear panel.
2. Connect the test leads to the terminals as shown in Figure 3-4.
3. Set the resolution of DCI (refer to "Resolution setting (digits)" in Section 4), and bandwidth of ACI (refer to "AC filter" in Section 4), or skip this step if the default setting is used.
4. Press **SHIFT + DCV** or **SHIFT + ACV** keys for DCI or ACI measurement.
5. Select the auto-range function by pressing the **AUTO** key on the front panel, or use the **up** and **down arrow** keys to select the desired range.
6. Connect test leads to your source signal and observe the reading shown on the display. If the input signal is greater than the allowed range, an overflow message ("OVLD") will be displayed.

Figure 3-4
Model 2100 current measurement (front panel)

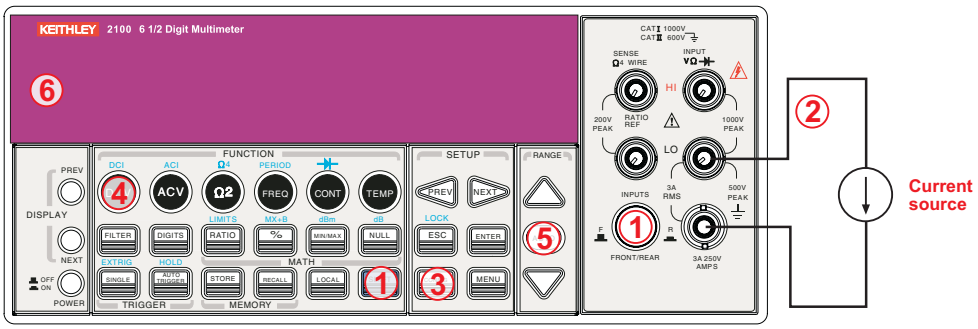

(Warning: Maximum input = 3A DC or RMS)

NOTE *Follow the same procedure when using either the front or rear panel terminals (refer to Figure 3-5).*

Figure 3-5
Model 2100 current measurement

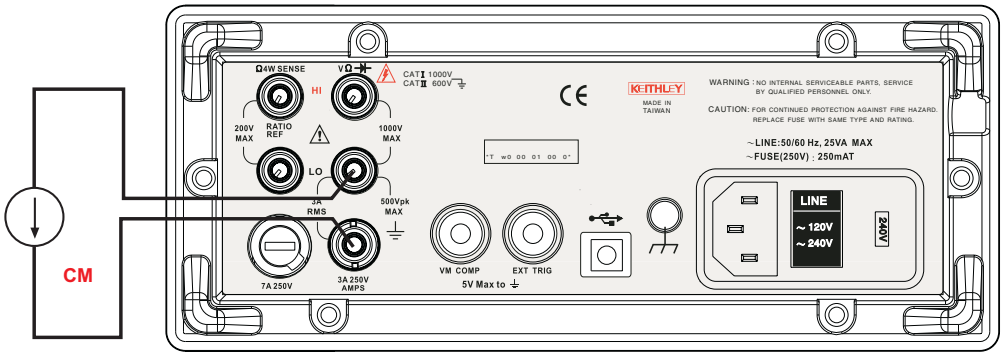

CM = Current measurement

Resistance measurements (2- and 4-wire)

The ranges for resistance measurement are 100Ω, 1KΩ, 10kΩ, 100kΩ, 1MΩ, 10MΩ, and 100MΩ, with a sensitivity of 100μΩ (on 100Ω range). There are two modes for measuring the resistance: 2-wire mode (refer to Figure 3-6) and 4-wire mode (refer to Figure 3-7). In 4-wire mode, the test current is sourced to the test resistance through one pair of test leads, and the test voltage across the resistance under test is measured from another set of test leads. As a result, the 4-wire mode is more accurate for low resistance measurements. The disadvantage of this is the longer settling time for 4-wire mode. Figures 3-8 and 3-9 show the input terminal connections on the rear panel for 2-wire mode and 4-wire mode respectively.

Figure 3-6
Model 2100 2-wire resistance

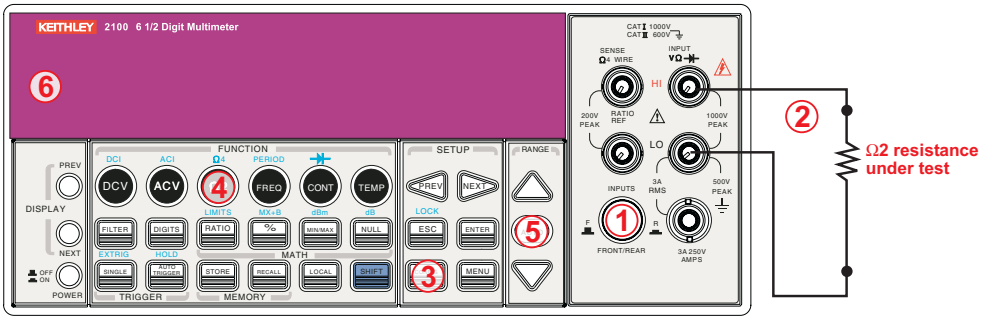

Note: Source current flows from the INPUT HI to INPUT LO terminals.

Figure 3-7
Model 2100 4-wire resistance

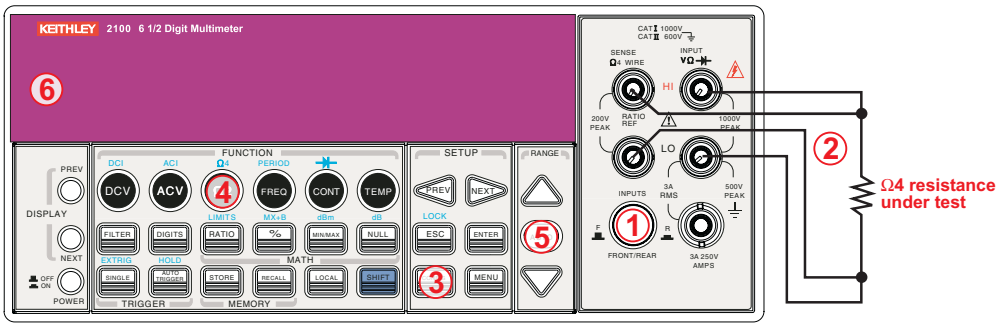

Note: Source current flows from the INPUT HI to INPUT LO terminals.

NOTE *Follow the same procedure when using either the front or rear panel terminals as shown in Figures 3-8 and 3-9.*

Figure 3-8
Model 2100 rear panel 2-wire resistance measurement

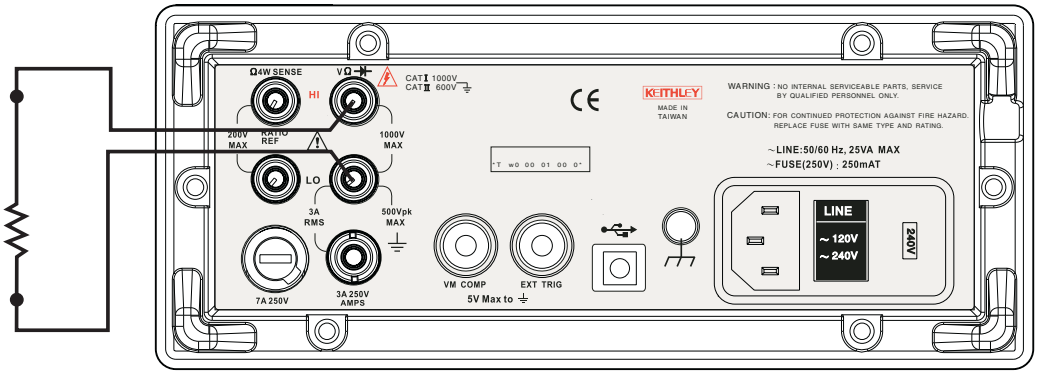

Figure 3-9
Model 2100 rear panel 4-wire resistance measurement

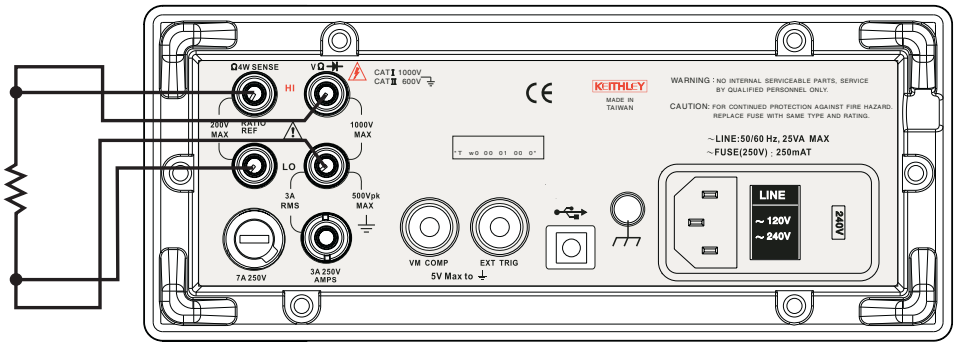

How to measure resistance

1. Select input signal connections on front or rear panel.
2. Connect the test leads to the terminals as shown in Figure 3-6 (2-wire) or Figure 3-7 (4-wire).
3. Set the resolution (refer to "Resolution setting (digits)" in Section 4), or skip this step if the default setting is used.
4. Press **Ω 2** key for a 2-wire measurement or **SHIFT + Ω 2** keys for 4-wire measurement.
5. Select the auto-range function by pressing the **AUTO** key on the front panel, or use the **up** and **down arrow** keys to select the desired range.
6. Connect test leads to your source signal and observe the reading shown on the display. If the input signal is greater than the allowed range, an overflow message ("OVLD") will be displayed.

Frequency and period measurements

The Model 2100 uses an on-board counter with 25MHz to measure the frequency (period). The measurement band is from 3Hz to 300kHz (or 333ms to 3.3µs), and the measurement voltages range from 100mV to 750V in AC. The default setting for RANGE is "auto-range."

WARNING ***The maximum input voltage allowed is 1000V. Applying excess voltage may damage the meter and cause unpredictable hazards that may result in personal injury or death.***

How to measure frequency and period

1. Select input signal connections on front or rear panel.
2. Connect the test leads to the terminals as shown in Figure 3-2.
3. Set the resolution (refer to "Set ADC (Auto Zero and Auto Gain)" in Section 4) and input jack, or skip this step if the default setting is used.
4. Press the **FREQ** button for frequency measurement or the **SHIFT + FREQ** keys for period measurement.
5. Select the AUTO-RANGE function by pressing the **AUTO** key on the front panel, or use the **up** and **down arrow** keys to select the desired range.

6. Connect test leads to your source signal and observe the reading shown on the display. If the input signal is beyond the allowed range, an overflow message ("OVLD") will be displayed.

NOTE *Follow the same procedure when using either the front or rear panel terminals (refer to Figure 3-3).*

Continuity measurements

The Model 2100 uses 1KΩ range for the continuity measurement. The meter beeps when the test resistance is less than the threshold resistance. The default threshold resistance is 10Ω, but you can set the threshold resistance to anything between 1Ω and 1KΩ. The resistance value you set is stored in volatile memory and will be cleared after the meter has been turned off. The source current for the continuity measurement is 1mA.

WARNING ***The maximum input voltage allowed is 1000V. Applying excess voltage may damage the meter and cause unpredictable hazards that may result in personal injury or death.***

How to measure the continuity

Select input signal connections on the front or rear panel.

1. Connect the test leads to the terminals as shown in Figure 3-2.
2. Set the input signal reconnect as shown in Figure 3-10.
3. Set threshold resistance by pressing **CONFIG + CONT** keys, or skip this step if the default resistance setting is used. When ready, press the **ENTER** key.
4. Press the **CONT** key.
5. The measured value will be shown on the display automatically. The meter will beep when measured resistance value is lower than threshold value.

Figure 3-10
Model 2100 2-wire resistance/continuity

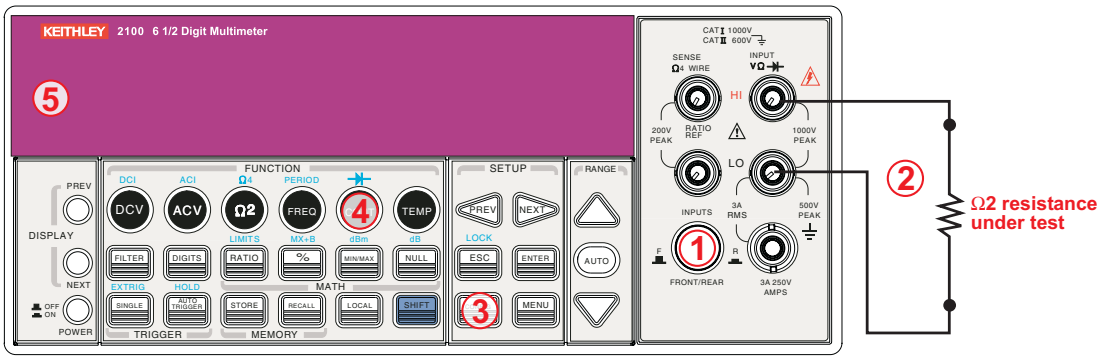

Note: Source current flows from the INPUT HI to INPUT LO terminals.

Diode measurements

The Model 2100 uses a current source of 1mA for diode testing. The maximum resolution is 10µV on a fixed range of 1VDC. The default threshold voltage is fixed between 0.3V and 0.8V and the reading rate is fixed at 0.1PLC (the voltage band is adjustable from 0.01V up to 1.2V). The meter will beep when the diode measured value is in range.

WARNING ***The positive end of the source signal must be connected to the HI input terminals, and the negative end to the LO input terminals.***

How to measure a diode

1. Select input signal connections on the front or rear panel.
2. Connect the diode to the terminals. For forward bias, connect the probe from the HI input terminal to the positive end of the diode, and connect the probe from the LO input terminal to the negative end of the diode.
3. Set voltage bound by pressing **CONFIG + SHIFT + CONT** keys. When ready, press **ENTER**, or skip this step if the default voltage bound is used.
4. Press the **SHIFT + CONT** keys to select the diode testing function and observe the reading on the display.

Figure 3-11
Model 2100 general purpose diode

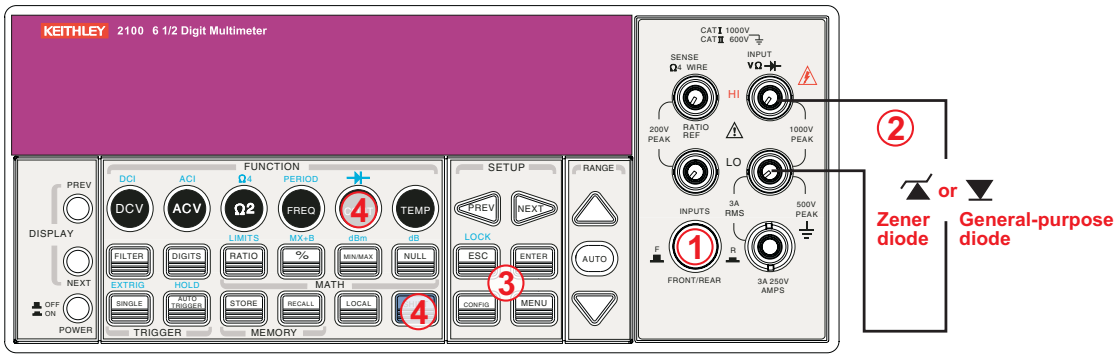

Note: Source current flows from the INPUT HI to INPUT LO terminals.

RTD measurements

There are three techniques that can be used to measure temperature with RTDs: 2-wire, 3-wire, and 4-wire measurements. You will find connection instructions and measuring procedures in the following subsections.

2-wire RTD measurements

How to measure temperature with a 2-wire RTD

Figure 3-12 shows a theory diagram of 2-wire RTD measurement.

Figure 3-12
Theory diagram of 2-wire RTD measurement

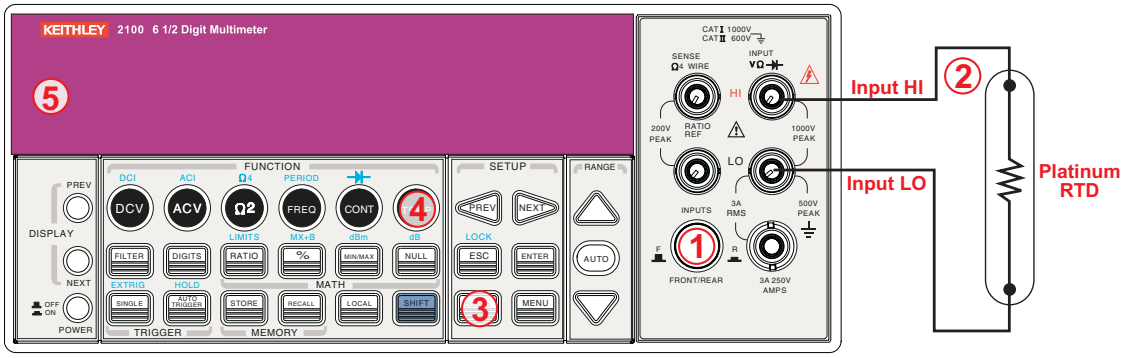

Note: Source current flows from the INPUT HI to INPUT LO terminals.

To take an RTD measurement:

1. Use the terminals switch to select the front terminals.
2. Connect the low thermal leads as shown in Figure 3-12.
3. Configure sensor type and unit using **CONFIG + TEMP** or the **PREV** and **NEXT** keys. When ready, press the **ENTER** key.
4. Press the **TEMP** key.
5. Place the RTD at the measurement point and read the display.

3-wire RTD measurements

How to measure temperature with a 3-Wire RTD

Figure 3-13 shows a theory diagram of a 3-wire RTD measurement:

Figure 3-13
Theory diagram of 3-wire RTD measurement

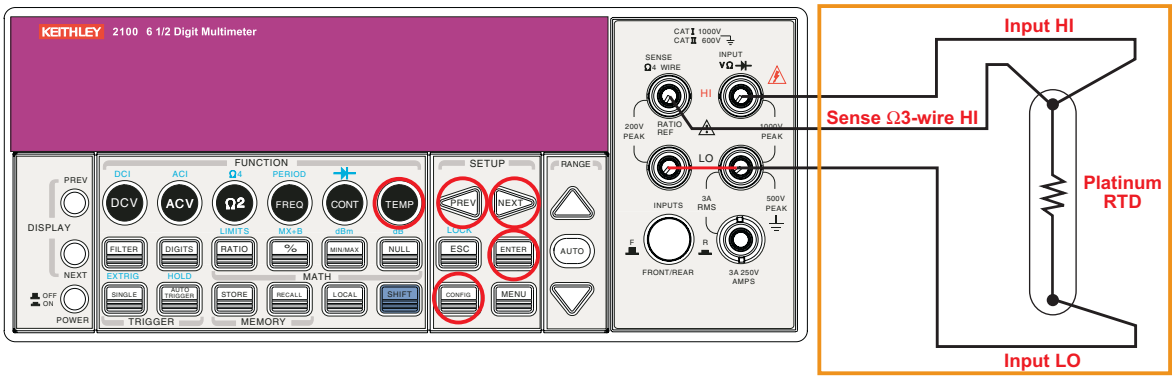

To measure temperature with a 3-wire RTD:

1. Measure the third wire using the 4-wire resistance measurement function (detailed later in this section).
2. Select **USER RTD** as the sensor:
   a) Press the **CONFIG** key.
   b) Next, press the **TEMP** key.

c) Using the **PREV** and **NEXT** keys, select the **SENSOR**.
d) Press **ENTER**.

3. Select **USER RTD** and press **ENTER**.
4. Select **R-ZERO** and press **ENTER**.
5. Enter in the sum of the zero RTD resistance plus the resistance of the third wire measured in step two (e.g., 100 Ohms plus 0.05 Ohms = 100.05 Ohms).
6. Also select the **ALPHA**, **BETA,** and **DELTA** parameters, and enter the coefficients for this particular RTD. The manufacturer of the RTD normally provides these values in the documentation shipped with the RTD.
7. Use the **USER RTD** selection as the **SENSOR**.

4-wire RTD measurements

How to measure temperature with a 4-Wire RTD

Figure 3-14 shows a theory diagram of a 4-wire RTD measurement:

Figure 3-14
Theory diagram of 4-wire RTD measurement

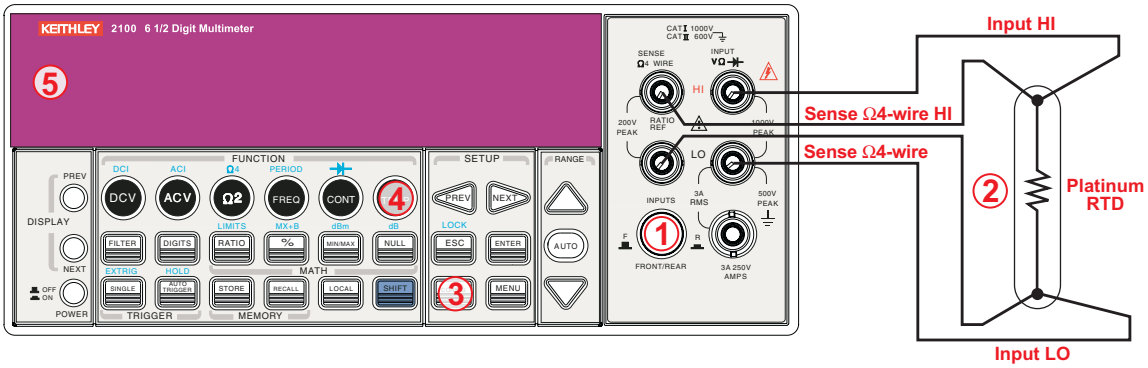

To measure temperature with a 4-wire RTD:

1. Use the terminals switch to select front terminals.
2. Connect the low thermal leads as shown in Figure 3-14.
3. Configure sensor type and unit using **CONFIG + TEMP** and the **PREV** or **NEXT** keys. When ready, press the **ENTER** key.
4. Press the **TEMP** key.
5. Place the RTD at the measurement point and read the display.

Section 4

Front Panel Operations

In this section:

Topic	Page
Introduction	4-2
Measurement configuration	4-2
Set ADC (Auto Zero and Auto Gain)	4-2
Filter	4-4
Resolution setting (digits)	4-6
DC input resistance	4-7
Threshold resistance (continuity)	4-8
Range (manual and auto)	4-9
Rate (integration time)	4-10
Sensor selection for temperature	4-11
Measurements	4-11
RTD	4-11
Input terminal switch	4-13
Trigger operations	4-14
Trigger mode	4-14
Trigger source	4-16
Trigger setting	4-16
Math operations	4-19
Ratio	4-20
% (Percent)	4-21
MIN/MAX	4-22
Null	4-23
Limits test	4-24
MX+B	4-25
dB	4-26
dBm	4-27
Other system-related operations	4-29
Display	4-29
Beeper	4-30
Reading memory (store and recall)	4-31
Sensitivity band (Hold)	4-33
Initial mode	4-34
Language	4-35
Error condition	4-35
Firmware revision	4-36
Calibration	4-40

Introduction

This section contains information about how to change the parameters and settings for your measurements, and details about each feature and function.

Measurement configuration

The following information will guide you through ways to configure measurement functions. It provides you the flexibility to change any parameter in any measurement function when needed, including the ADC setting, filter, resolution settings (digits), DC input resistance, threshold resistance (continuity), range (manual and auto), rate (integration time), remote interface selection, and input terminal switch.

Set ADC (Auto Zero and Auto Gain)

Zero and Gain

The Auto Zero and Auto Gain functions are used to minimize offset influence on your measurements. When Auto Zero or Auto Gain is enabled, the Model 2100 takes the input signal reading as a base value and then internally disconnects the input signal, taking an offset reading (a null offset). It then subtracts the offset from the base to get an accurate measurement:

Displayed reading = base value (input signal) - offset value

When Auto Zero or Auto Gain is enabled, the meter takes an offset reading for each subsequent measurement. However, when Auto Zero or Auto Gain is disabled, the meter only takes one offset reading each time when you change the function settings. You can set the period to change the time interval for taking an offset reading.

Defaults

The default settings for Auto Zero and Auto Gain are enabled by default. Selected values for Auto Zero and Auto Gain are stored in volatile memory and the default settings will be restored when the meter is turned-off.

How to set Auto Zero and Auto Gain

You can change the Auto Zero and Auto Gain settings using the front panel or through a remote interface.

NOTE *The Auto Zero setting is always affected by the resolution setting. Whenever the resolution is altered, Auto Zero will change accordingly. The relationship between resolution and Auto Zero is shown in Table 4-1.*

Table 4-1
Relationship of resolution to Auto Gain

Resolution	Auto Zero	Auto Gain	Integration time (PLC)
Fast 4 1/2 digits	Off	Off	0.02
Slow 4 1/2 digits	On	On	0.1
Fast 5 1/2 digits	Off	Off	0.1
Slow 5 1/2 digits	On	On	1
Fast 6 1/2 digits	On	On	1
Slow 6 1/2 digits	On	On	10

To set Auto Zero and Auto Gain from the front panel:

1. Press the **MENU** key on the multimeter front panel.
2. Using the **PREV** and **NEXT** keys, select **SET ADC**, then press the **ENTER** key.
3. Select either **ZERO** or **GAIN** (using the **PREV** and **NEXT** keys), then press the **ENTER** key.
4. Select either the **AUTO ZERO** or **AUTO GAIN** option, then press the **ENTER** key.
5. Select either **ON** or **OFF** and press the **ENTER** key.

Please refer to Figure 4-1 for the location of these front panel keys.

Procedures: MENU → SET ADC → ZERO → AUTO ZERO {ON|OFF}
MENU → SET ADC → GAIN → AUTO GAIN {ON|OFF}

NOTE *To change the resolution, refer to "Resolution setting (digits)."*

Figure 4-1
Setting Auto Zero and Auto Gain from the front panel

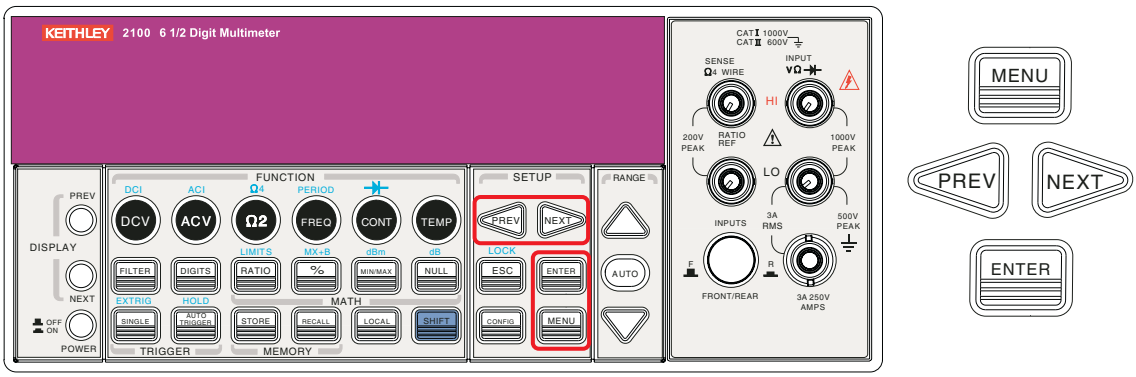

To set Auto Zero and Auto Gain from the remote interface:

To set Auto Zero and Auto Gain through the remote interface, use the following commands:

```
SENSe:ZERO:AUTO {OFF|ONCE|ON}
SENSe:GAIN:AUTO {OFF|ONCE|ON}
```

The **OFF** and **ONCE** parameters have a similar effect. **Auto Zero OFF** or **Auto Gain OFF** doesn't issue a new offset measurement. However, **Auto Zero ONCE** or **Auto Gain ONCE** issues an immediate offset measurement.

Filter

Filter is used to remove noises in measurement readings. The Model 2100 is equipped with two types of filters: an AC filter and a digital filter. The AC filter is used for AC measurements only, and affects the speed measurement reading. The digital filter stabilizes the measurement readings by averaging the readings. Both are described in detail in the following text.

AC filter

Definition

The measurement bandwidth can be set by selecting one of three AC filters (**Slow**, **Medium**, or **Fast**) in order to achieve either higher accuracy in low frequency measurements, or faster AC settling time.

Default

The factory default is 20Hz (Medium). You can select the appropriate filter type when you set bandwidth value. Your selection is stored in volatile memory, and the default setting will be restored when the meter is turned-off.

Table 4-2
AC filters default settings

Bandwidth	AC filter	Time (seconds per reading)
3Hz ~ 300KHz	Slow	7
20Hz ~ 300KHz	Medium	1
200Hz ~ 300KHz	Fast	0.1

How to set the AC filter in AC measurements

You can set the AC Filter either through the front panel or through a remote interface (see Section 5, "Remote Interface Operations").

To set the AC Filter using the front panel:

1. Press the **CONFIG + ACV** keys.
2. Use the **PREV** or **NEXT** keys to select the **BANDWIDTH** submenu, then press the **ENTER** key.
3. You can use one of three bandwidth options: 3Hz, 20Hz, and 200Hz. Select the desired bandwidth using the **PREV** and **NEXT** keys, then press the **ENTER** key.

Please refer to Figure 4-2 for the location of these front panel keys.

Figure 4-2
Setting the AC Filter using the front panel

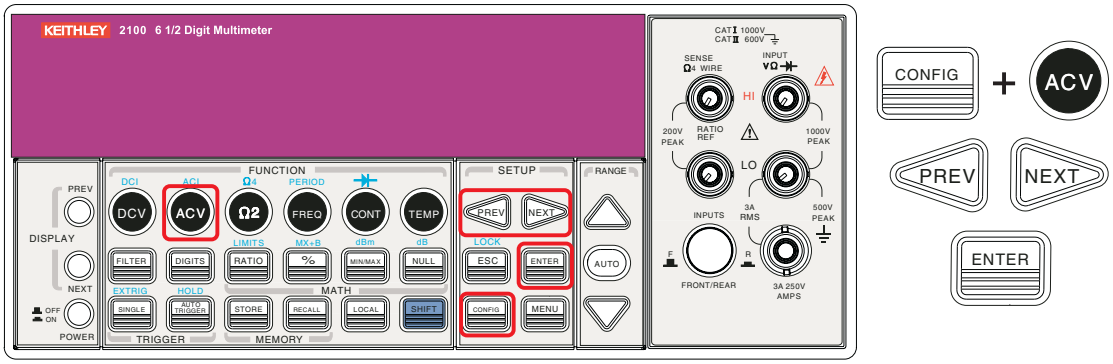

Remote interface operation

From your PC terminal, use the following command to specify the filter type:

```
DETector:BANDwidth_20
```

Digital filter

Definition

The Model 2100 uses an averaging digital filter to yield a reading from 2 to 100 past measurement readings (past measurement readings are stored in stack memory). You can select one of two modes of digital filter operation: **Moving Average** mode or **Repeating Average** mode.

The moving average filter puts the specified number of reading conversions in a first-in, first-out order. The very first measurement reading simply fills up the stack. To yield a reading for display, the filter produces an average of the stacked measurement readings every time a new measurement reading is available, replacing the oldest reading in the stack. In the **Repeating Average** mode, the multimeter waits for the measurement reading stack to fill up, then take an average to produce a reading for display. It then flushes the stack and starts over with an empty stack. Consequently, the repeating digital filter yields one reading for display every specified number of measurement readings.

The digital filter is not available for diode, continuity, frequency, and period measurements.

Default

The digital filter is enabled, is in Moving Average mode, and is set to use the last 10 readings by default.

How to enable/disable the digital filter

Press the **FILTER** key to switch the digital filter function. The FILT annunciator indicates the state of the digital filter; when it is lit, the filter is enabled.

How to configure the digital filter

You can configure the digital filter through either the front panel operation or the remote interface operation.

To set the number of readings from the front panel:

1. Press the **CONFIG** key, and then the **FILTER** key.
2. Use the **PREV** and **NEXT** keys to select the **READINGS** submenu, then press **ENTER**.
3. Use the **up** and **down arrow** keys to enter the number of readings (from 2 to 100) to be taken in order to get an average value. Press the **ENTER** key when you are prompted to confirm your settings.

To set the mode from the front panel:

1. Press the **CONFIG** key, and then the **FILTER** key.
2. Use the **PREV** and **NEXT** keys to select the **MODE** and press the **ENTER** key.
3. Use the **PREV** and **NEXT** keys to select **MOVING AVG** or **REPEAT AVG**, then press the **ENTER** key to confirm your settings.
4. Press the **FILTER** key to enable or disable this function.

To set the digital filter from the remote interface:

Use the following commands to set your digital filter:

```
SENSe:AVERage:TCONtrol {MOVing|REPeat}
SENSe:AVERage:TCONtrol?
SENSe:AVERage:COUNt {<value>|MINimum|MAXimum}
SENSe:AVERage:COUNt? [MINimum|MAXimum]
SENSe:AVERage:STATe {OFF|ON}
SENSe:AVERage:STATe?
```

Resolution setting (digits)

Definition

Resolution is the number of digits a multimeter can measure. Using the Model 2100 multimeter, you can select the resolution for a specific measurement. The choices for the resolution setting are: fast 4 1/2, slow 4 1/2, fast 5 1/2, slow 5 1/2, fast 6 1/2, and slow 6 1/2. For higher measurement accuracy, select 6 1/2-digit resolution; for faster measurements, select 4 1/2-digit resolution.

The resolution setting applies to all math operations under the selected measurement function. The selected value is stored in a volatile memory and the setting is only valid for the current measurement function. You can select different resolutions for different measurement functions.

Default

The default value for resolution is "slow 5 1/2 digit" and the default value will be restored when the meter has been turned off or after a remote interface reset. The user-selected value for the resolution setting is stored in a volatile memory and the setting is only valid for the current measurement function (refer to Table 2-2).

NOTE *The resolution setting for AC measurements is actually fixed at 6 1/2 digits. When you select a lower resolution, the meter will mask out the extra digits. Your selection of resolution for AC function will not affect the actual speed or accuracy.*

How to set the resolution

The resolution can be set either through the front panel or a remote interface.

To set the resolution from the front panel:

Method A:

1. Select the desired measurement function by pressing one of the function keys located on the first row of your meter's front panel (the locations of the keys are shown with red frames in Figure 4-3).
2. Press the **DIGITS** key to select the resolution for your measurement. You can press the **DIGITS** key several times to see how the resolution setting changes from 4 1/2, 5 1/2, to 6 1/2.

NOTE *When using Method A to set the resolution, your options are 4 1/2 (slow), 5 1/2 (slow), and 6 1/2 (fast).*

Method B:

1. Press the **CONFIG** key and select one of the following functions: **DCV**, **DCI** (**SHIFT + DCV**), **Ω2, Ω4** (**SHIFT + Ω2**), **FREQ,** and **PERIOD** (**SHIFT + FREQ**).
2. Select the **RESOLUTION** submenu and press **ENTER**. If it is not shown on the display, use the **PREV** or **NEXT** keys to locate it.
3. Use the **PREV** and **NEXT** keys to find the desired resolution. Press **ENTER** on your choice.

NOTE *The resolution of AC measurements is fixed at 6 1/2 digits.*

NOTE *The options for frequency and period measurements are 4 1/2 (slow), 5 1/2 (slow), and 6 1/2 (slow).*

Figure 4-3
Front panel resolution

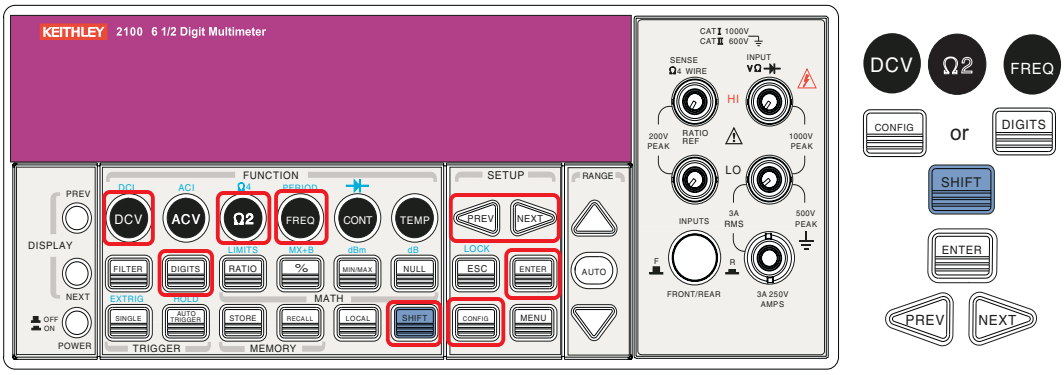

How to set the resolution using the remote interface:

Use the following commands on your PC terminal to set the resolution for your measurement:

```
CONFigure:<function> <range>,<resolution>
MEASure:<function>? <range>,<resolution>
SENSe:<function>:RESolution <resolution>
```

DC input resistance

Definition

To reduce the effect of loading errors due to the input resistance, the Model 2100 allows you to select a much larger input resistance (> 10GΩ) for low input DC voltage (100mV, 1V, and 10V)

measurements. This feature is only available for DC voltage measurements and is not applicable to other measurement functions.

Default

The default input resistance for all measurements is 10MΩ (refer to Table 2-2). The DC input resistance can only be changed for measurements with 100mV, 1V, or 10V range. For 100V DCV, 1000V DCV, and other measurement functions, the input resistance is fixed at 10MΩ and cannot be changed. Also note that the user-selected value is stored in volatile memory. The default setting will be restored after the meter has been turned off.

How to set the DC input resistance

You can set the DC input resistance either through the front panel or through a remote interface.

To set the DC input resistance from the front panel:

1. Press **CONFIG + DCV.**
2. Use the **PREV** and **NEXT** keys to locate the **INPUT R** option, then press **ENTER** to select it.
3. Select the desired value for the input resistance by pressing the **PREV** and **NEXT** keys, then press **ENTER**. Two values are available: 10MΩ or > 10GΩ. The locations of these keys are shown in Figure 4-4.

Figure 4-4
Front panel DCV

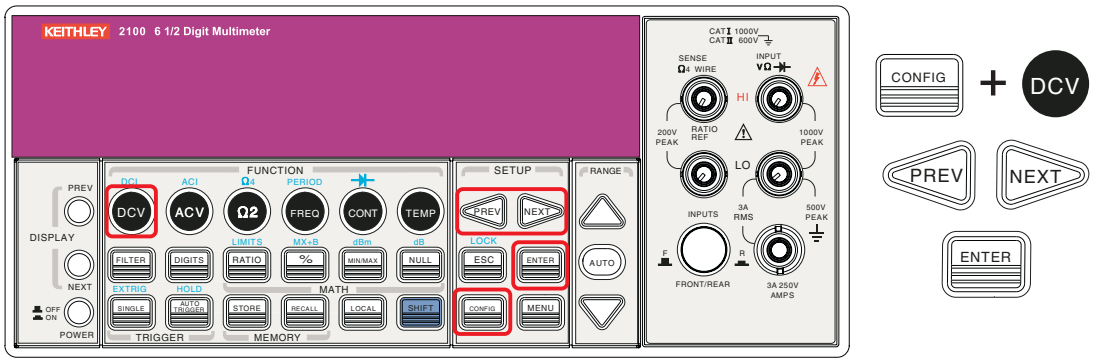

To set the DC input resistance from a remote interface:

The automatic input resistance mode can be enabled or disabled. When the automatic input resistance mode is set to AUTO OFF (default), the input resistance is fixed at 10MΩ for all ranges. When set to AUTO ON, the input resistance is set to >10GΩ for the three lowest DC voltage ranges (100mV, 1V, and 10V). Use the following command from your PC terminal to disable the auto input DC resistance setting (the result is a fixed input DC resistance at 10MΩ for all measurements):

```
INPut:IMPedance:AUTO {OFF | ON}
```

Threshold resistance (continuity)

Definition

When testing continuity, the multimeter will make a beeping sound when the measured resistance is less than the threshold resistance. The threshold resistance can be set to any value between 1Ω and 1000Ω.

Default

The factory default for continuity threshold resistance is 10Ω. Your settings are stored in volatile memory, and the default value will be restored after the meter has been turned-off.

How to set the threshold resistance

Threshold resistance can only be changed through the front panel:

1. Press the **CONFIG** key and then the **CONT** key.
2. Use the **PREV** and **NEXT** keys to move through the digits, and the **up** and **down arrow** keys to lower or increase the number to your desired value.
3. Press **ENTER** to set the value. The locations of these keys are shown in Figure 4-5.

Figure 4-5
Front panel threshold resistance

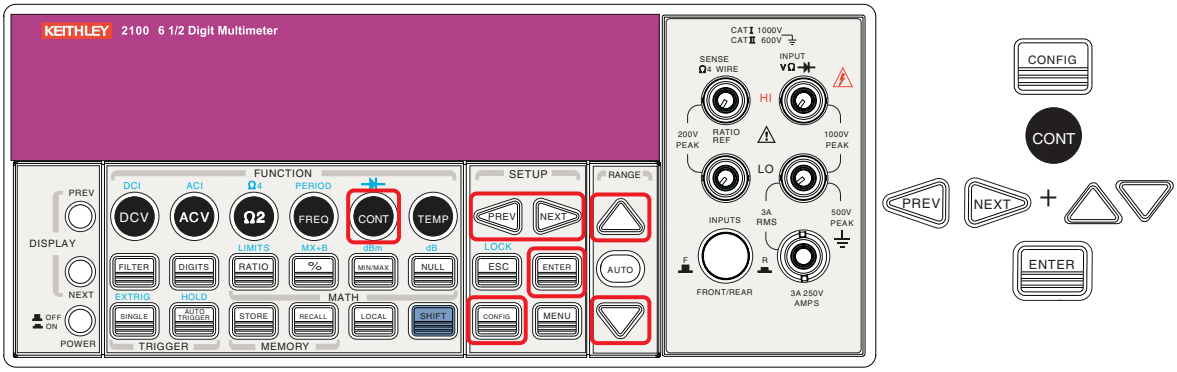

Range (manual and auto)

Definition

The Model 2100 multimeter can automatically select measurement ranges for you (except for CONT and DIODE); however, selecting the appropriate ranges manually can achieve a faster settling time.

If the input signal is beyond allowed range, an OVLD message will be shown on the display. The threshold of maximum readings for each range is 120% and the minimum is 10%.

Default

The default range setting for the Model 2100 is auto-range. The user-selected range is stored in volatile memory and the default will be restored when the meter is turned off (refer to Table 2-2 for the factory default range).

How to set the auto / manual range

You can set the auto / manual range either through the front panel or through a remote interface.

To set the auto/manual range from the front panel:

First choose a measurement function on the front panel, then press the **AUTO** key to select the auto-range feature, or use **up** and **down arrow** keys to manually select a range. If the selected range is not shown on the bottom of the display, press the round **PREV** or **NEXT** keys (on the left side of the front panel) until the range information appears. The location of these keys shown in Figure 4-6.

Figure 4-6
Front panel auto-range

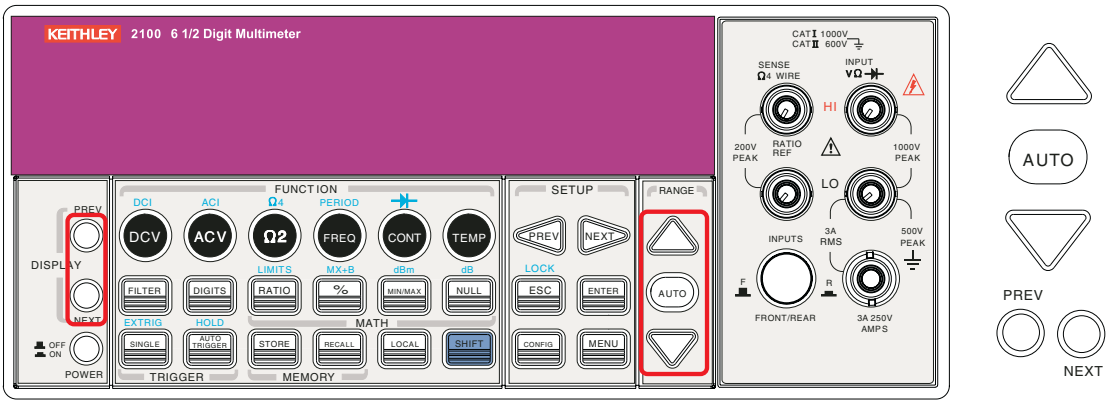

To set the range from a remote interface:

Use the following commands from your PC terminal to set the range:

```
CONFigure:<function> <range>,<resolution>
MEASure:<function>? <range>,<resolution>
SENSe:<function>:RANGe <range>
SENSe:<function>:RANGe:AUTO {OFF|ON}
```

Rate (integration time)

Definition

Integration time is the period of time the analog-to-digital (A/D) converter takes to sample the input signal. The integration time feature allows you to optimize either the speed or the resolution, as well as the noise rejection and accuracy of the measurement. The unit of the integration time is in PLC (power line cycles); one PLC for 60Hz is 16.67ms, and for 50Hz is 20ms.

The Model 2100 has four different integration times you can select: 0.02 PLC, 0.1 PLC, 1 PLC, and 10 PLC.

Default

For DCV, DCI, and resistance measurement, the default integration time is 1 PLC. The user selected value is stored in volatile memory, and the default value will be restored when the meter is turned-off.

How to set the integration time:

You can set the integration time either through the front panel or the remote interface operation.

To set the integration time from the front panel:

Integration time is set indirectly when you select the measurement resolution. Please refer to "Resolution setting (digits)" later in this section for details about how to set resolution or digits. Table 4-1 shows the relationship between the resolution and the integration time.

To set the resolution for your measurement from a remote interface:

Use the following commands on your PC terminal to set the resolution:

```
CONFigure:< function> <range>, <resolution>
MEASure:< function>? <range>, <resolution>
SENSe:< function>:RESolution <resolution>
```

To set the integration time through a remote interface, use the following commands:

```
SENSe:VOLTage:DC:NPLCycles {0.02|0.1|1|10|MINimum|MAXimum}
SENSe:VOLTage:DC:NPLCycles? [MINimum|MAXimum]
SENSe:CURRent:DC:NPLCycles {0.02|0.1|1|10|MINimum|MAXimum}
SENSe:CURRent:DC:NPLCycles? [MINimum|MAXimum]
SENSe:RESistance:NPLCycles {0.02|0.1|1|10|MINimum|MAXimum}
SENSe:RESistance:NPLCycles? [MINimum|MAXimum]
SENSe:FRESistance:DC:NPLCycles {0.02|0.1|1|10|MINimum|MAXimum}
SENSe:FRESistance:DC:NPLCycles? [MINimum|MAXimum]
```

To set the aperture time (or gate time) from a remote interface:

For frequency and period measurements, aperture time (or gate time) is analogous to integration time; use the following commands to set it (specify 10ms (4 1/2 digits), 100ms (default; 5 1/2 digits), or 1s (6 1/2 digits)):

```
SENSe:FREQuency:APERture {0.01|0.1|1|MINimum|MAXimum}
SENSe:FREQuency:APERture? [MINimum|MAXimum]
SENSe:PERiod:APERture {0.01|0.1|1|MINimum|MAXimum}
SENSe:PERiod:APERture? [MINimum|MAXimum]
```

Sensor selection for temperature

Measurements

The multimeter supports RTDs for temperature sensors. You will need to configure the multimeter for the correct RTD type before you can make temperature measurements.

RTD

Definition

If you are using an RTD, the options are: PT100, D100, F100, PT385, PT3916, user-defined RTD, and SPRTD. If you need to change the factors that are used to calculate the temperature of the RTD, choose user-defined RTD, where you can change any factors you wish. The default factors used are listed in Table 4-3:

Table 4-3
Default factors

Type	Alpha	Beta	Delta	R-zero
PT100	0.003850	0.10863	1.49990	100Ω
D100	0.003920	0.10630	1.49710	100Ω
F100	0.003900	0.11000	1.49589	100Ω
PT385	0.003850	0.11100	1.50700	100Ω
PT3916	0.003916	0.11600	1.50594	100Ω

The temperature equation that is used to determine the RTD temperature is:

When t < 0°C:

$$R_t = R_0 \left[1+At+Bt^2+Ct^3(t-100)\right]$$

When 0°C < t < 630 °C:

$$R_t = R_0 \left(1+At+Bt^2\right)$$

When 0°C < t < 630 °C:

$$R_t = R_0 \left(1+At+Bt^2\right)$$

Where:

$$A = \alpha\left(1+ \frac{\delta}{100}\right)$$
$$B = -\alpha\delta \cdot 10^{-4}$$
$$B = -\alpha\beta \cdot 10^{-8}$$

If you are using SPRTD (Standard Platinum RTD), select SPRTD and specify the seven coefficients under SPRTD submenu.

The ITS (International Temperature Scale) -90 standard provides two reference equations for Standard Platinum Thermometers covering temperature range from 18.8033K to 1234.93K. However, one SPRTD usually cannot cover the entire range, so the temperature range is broken up into a few subranges. These subranges depend on the calibration point of temperature scale and are based on the melting or triple points of various pure substances. For an exact list of the elements needed and details on RTD calibration, refer to NIST Technical Note 1265, "Guidelines for Realizing the International Temperature Scale of 1990." In each subrange, the calibration constants required for that subrange are listed.

Default

The default sensor type is PT100.

How to set up the RTD

You can set up the RTD configuration either through the front panel or the remote interface operation.

To set up the RTD from the front panel:

1. If you are using an RTD, press **CONFIG** and then **TEMP**.
2. Use the **PREV** and **NEXT** keys to locate the **SENSOR** submenu and press **ENTER** to go to the submenu.
3. Use the **PREV** and **NEXT** keys to locate your sensor type, then press **ENTER** to select your desired sensor type.

- Choosing **USER** takes you to a menu where you can specify factors used in the calculation equation to obtain the temperature. Use the **PREV** and **NEXT** keys to move through the digits and the **up** and **down arrow** keys to change the numbers to the desired value. Press **ENTER** to set the value.
- Choosing **SPRTD** takes you to a menu where you can specify the seven coefficients that are used to determine the temperature. Use the **PREV** and **NEXT** keys to move through the digits and the **up** and **down arrow** keys to change the numbers to a desired value. Press **ENTER** to set the value.

To set up the RTD from a remote interface:

Use the following commands to set up the RTD configuration:

```
SENSe:TEMPerature:RTD:TYPE{PT100|D100|F100|PT385|PT3916|USER|SPRTD}
SENSe:UNIT {Cel|Far|K}
SENSe:UNIT?
SENSe:TEMPerature:RTD:RZERo {<value>|MINimum|MAXimum}
SENSe:TEMPerature:RTD:ALPHa {<value>|MINimum|MAXimum}
SENSe:TEMPerature:RTD:BETA {<value>|MINimum|MAXimum}
SENSe:TEMPerature:RTD:DELTa {<value>|MINimum|MAXimum}
SENSe:TEMPerature:SPRTD:RZERo {<value>|MINimum|MAXimum}
SENSe:TEMPerature:SPRTD:A4 {<value>|MINimum|MAXimum}
SENSe:TEMPerature:SPRTD:B4 {<value>|MINimum|MAXimum}
SENSe:TEMPerature:SPRTD:AX {<value>|MINimum|MAXimum}
SENSe:TEMPerature:SPRTD:BX {<value>|MINimum|MAXimum}
SENSe:TEMPerature:SPRTD:CX {<value>|MINimum|MAXimum}
SENSe:TEMPerature:SPRTD:DX {<value>|MINimum|MAXimum}
```

Input terminal switch

Definition

This Model 2100 has five input terminals on both the front and rear terminals for taking measurements. When the rear input is selected, the REAR annunciator is shown on the front panel display.

Default

The default setting is the front terminals.

How to switch the terminals:

To switch between the front and rear input terminals, press the **INPUTS** button on the front panel (refer to Figure 4-7 for the location of the button and terminals).

Figure 4-7
Front panel input switch terminals

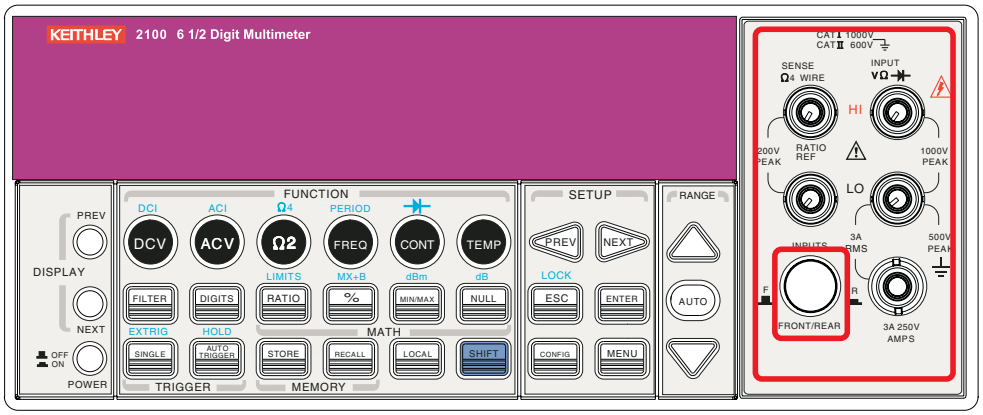

Trigger operations

In this section, we will discuss the triggering system in the Model 2100 multimeter. The Model 2100 provides a variety of trigger operations. You can select a trigger mode, a trigger source, and different trigger settings for specific measurements. Your selection is stored in volatile memory and the default settings will be restored after power is turned-off. Figure 4-8 shows the trigger operation for the Model 2100.

Figure 4-8
Trigger operation flow chart

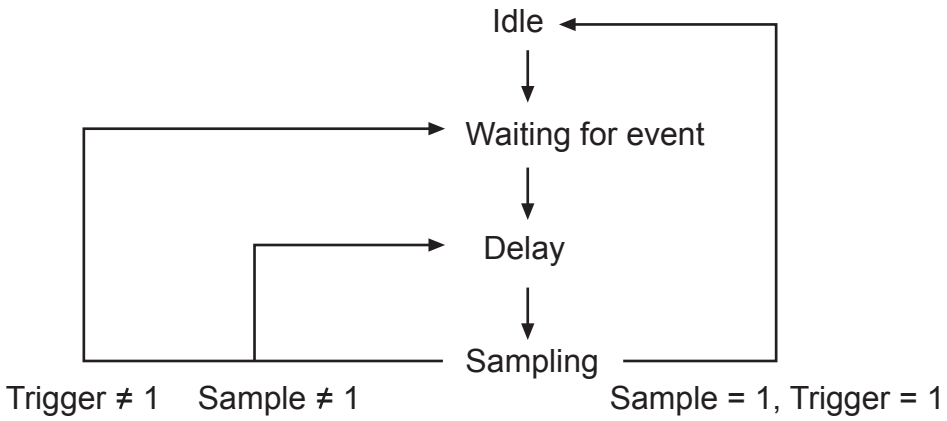

Trigger mode

You can choose from three trigger modes in the Model 2100: auto, immediate, and single triggering. The factory default is auto triggering.

Auto triggering mode (front panel operation only)

Definition

Auto triggering takes continuous readings at the fastest rate possible for the designated measurement (the rate of readings depends on the current settings). Auto triggering mode, which is the default trigger mode for the Model 2100, is only available through the front panel.

How to use auto trigger

Press the **AUTO TRIGGER** key on the front panel to toggle auto triggering on and off (refer to Figure 4-9).

Figure 4-9
Toggle auto triggering on and off

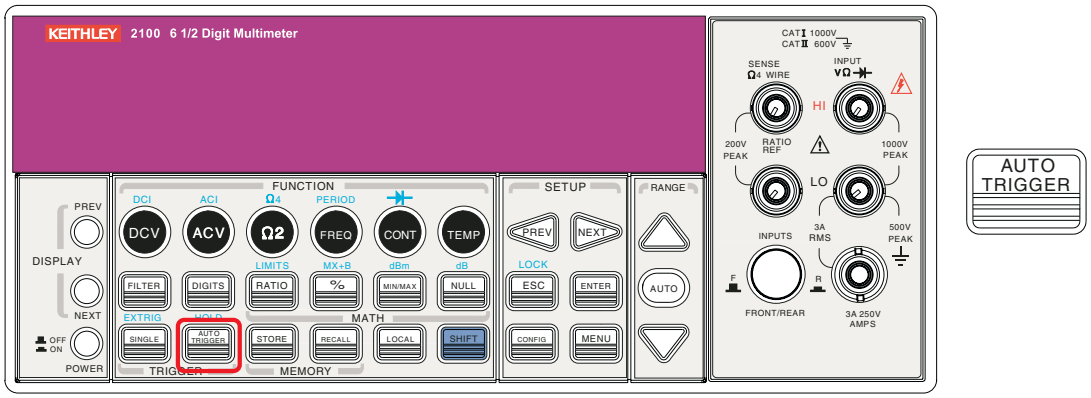

Internal immediate trigger mode (remote interface operation only)

Definition

The Internal Immediate Trigger mode is only available through the remote interface operation, and is the default setting for the remote interface. When the meter is in Immediate Trigger mode, a trigger will be generated immediately after the meter goes into a "wait for event" state.

How to use immediate trigger

Use the following command from your PC terminal to set the Internal Immediate Trigger:

```
TRIGger:SOURce IMMediate
```

Single Trigger mode (accessible only through the front panel)

Definition

Single Trigger mode takes one reading (or the specified number of readings) each time you press the **SINGLE** key (refer to "Trigger setting" for details on setting the number of samples on each trigger). When the **TRIG** annunciator on the display is lit, the meter is ready for the next trigger event. Single Trigger mode is only available through the front-panel.

How to use Single Trigger

First select the measurement function, and then press the **SINGLE** key on the front panel to set the trigger mode (refer to Figure 4-10).

Figure 4-10
Single trigger

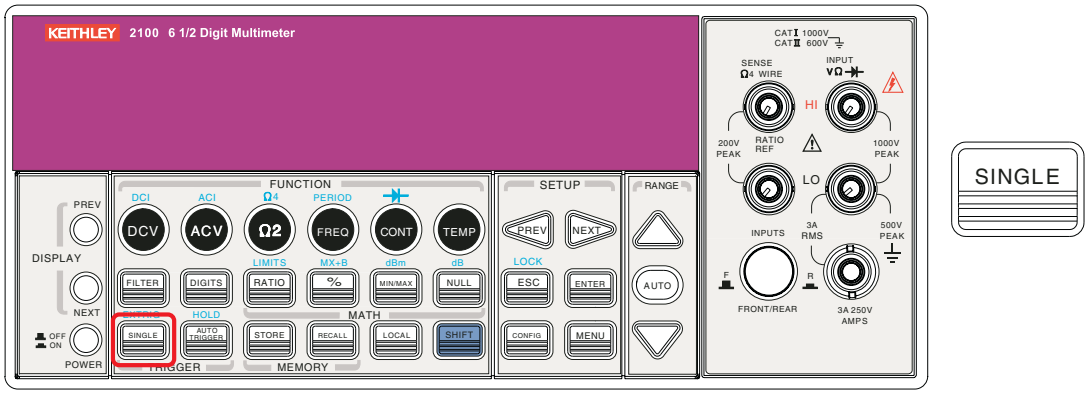

Trigger source

You can specify one of three trigger-source options for the Model 2100: front panel, external hardware trigger source, and remote interface.

Front panel operation

Use the front panel **AUTO TRIGGER** key for auto triggering, and the **SINGLE** key for single triggering.

External hardware

You can apply a trigger pulse from an external hardware source connected to the Ext TRIG (BNC) terminal on the rear panel. Press both the **SHIFT** + **SINGLE** keys to enable the external hardware trigger (the "EXT" and annunciator on the display is lit when the external hardware trigger is enabled).

Remote interface operation (software or internal trigger)

Software trigger: Software triggering is similar to single triggering, but instead of using the **SINGLE** key on the front panel, you send a command from your PC to the multimeter to generate an event. Use the following command from your PC terminal to set the trigger source:

```
TRIGger:SOURce BUS
```

Internal trigger: The Internal Trigger is the default trigger mode for the remote interface operation. In the Internal Trigger mode, a trigger signal will be issued whenever the multimeter is in the wait-for-trigger state. To set the internal trigger, use the following command from your PC terminal:

```
TRIGger:SOURce IMMediate
```

Trigger setting

You can specify a variety of trigger settings on the Model 2100, including the number of samples per trigger, the number of triggers per event, reading hold, and the trigger delay for your measurements.

Number of samples on each trigger

By default, the multimeter takes only one reading on each trigger, but you can instruct the multimeter to take a specific number of readings (up to 50,000) each time it receives a trigger. The sample count is stored in volatile memory. It is lost once power is disabled/lost.

To set the number of samples using the front panel:

1. Press the **MENU** key and use the **PREV** and **NEXT** keys to select **TRIG**, then press **ENTER**.
2. Next, use the **PREV** and **NEXT** keys to select **N SAMPLE**, then press **ENTER**.
3. Set the desired number of readings by pressing the **up** and **down arrow** keys to increase or decrease the number, and use the **PREV** and **NEXT** keys to move through the digits. Refer to Figure 4-11 for the location of the keys.

Procedures: MENU → TRIG → N SAMPLE → <Number>

Figure 4-11
Trig submenu

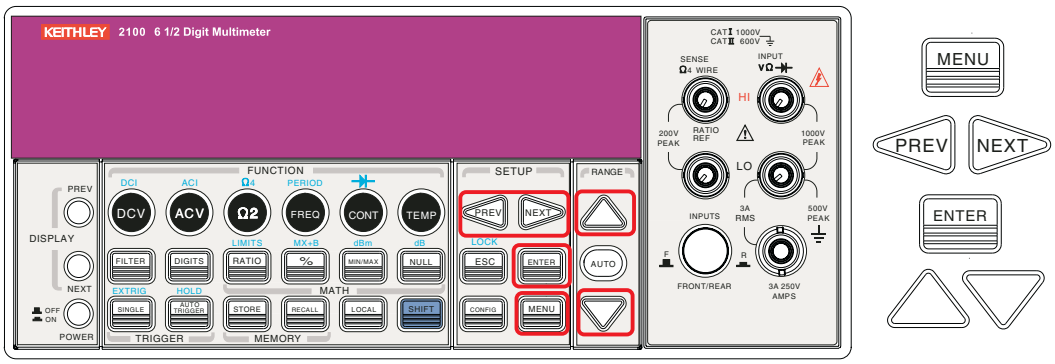

To set the number of samples using a remote interface:

1. Use the following command to set the number of samples from your PC terminal:

```
SAMPle:COUNt <value>
```

Number of triggers

Although the meter normally takes one trigger before returning to the idle state, you can manually specify the number of triggers it accepts before it returns to the idle state (this can only be done using the remote interface).

To set the number of triggers between each idle state:

1. Use the following command from your PC terminal to set multiple triggers between each idle state:

```
TRIGger:COUNt <value>
```

Reading hold

The reading hold feature is used to hold a stable reading on the display. When a reading is stable, enabling the reading hold will hold the stable reading and trigger a beeping sound. The reading hold feature depends on an adjustable sensitivity band to determine if a reading is stable. The Model 2100 Digital Multimeter considers a reading stable when three consecutive readings are within the sensitivity band. Refer to "Sensitivity band (hold)" for a description of how to adjust the sensitivity band.

To enable the reading hold feature (this feature is only available from the front panel):

1. Press both the **SHIFT** and **AUTO TRIGGER** keys.
2. To disable reading hold, simply press **AUTO TRIGGER** (refer to Figure 4-12).

Figure 4-12
Reading hold

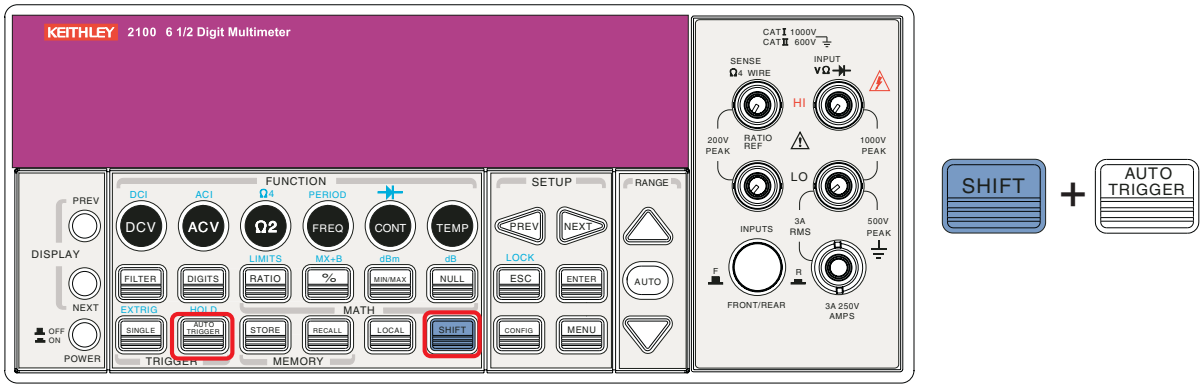

Trigger delay

This feature is useful if you need a longer delay time while the system is stabilizing. The time needed to stabilize a measurement system is called the "settling time." The settling time depends on the measurement range, cable properties, and signal source.

Trigger delay defaults

The default setting for trigger delay is automatically applied if you do not specify a delay value. The Model 2100 will automatically select a delay time based on the measurement settings. A list of the default settings for each measurement function is shown in Table 4-3. The time range for trigger delay is from 0 to 3,600 seconds. Your selection of delay time is stored in volatile memory; the default delay time will be restored when the meter is turned-off.

The internal settings of automatic trigger delay

The delay time for automatic trigger delay is determined by the selected combination of measurement function, range, integration time, and AC filter speed (refer to Table 4-4 for default measurement delay times).

Table 4-4
Default measurements

Measurement	Setting	Trigger delay time
DCV/DCI	PLC > = 1	1.5ms
	PLC < 1	1.0ms
Ω2 and Ω4 (PLC≥1)	100Ω ~ 100kΩ	1.5ms
	1MΩ	15ms
	10MΩ ~ 100MΩ	100ms
Ω2 and Ω4 (PLC>1)	100Ω ~ 100kΩ	1.0ms
	1MΩ	10ms
	10MΩ ~ 100MΩ	100ms
Measurement	**Setting**	**Trigger delay time**
ACV / ACI (remote interface/external trigger/single trigger)	3Hz	7.0s
	20Hz	1.0s
	200Hz	600ms
ACV / ACI (Front panel w/ auto trigger ON)	3Hz	1.5s
	20Hz	200ms
	200Hz	100ms
Frequency / period	Remote interface / external	1.0s
	Front panel w/ auto trigger on	0s

Setting delay time

You can set the delay time from either the front panel or a remote interface.

To set the delay time from the front panel:

1. Press the **MENU** key and use the **PREV** and **NEXT** keys to select **TRIG**, then press **ENTER**.
2. Use the **PREV** and **NEXT** keys to select **DELAY**, then press **ENTER**.
3. Use the **up** and **down arrow** keys to move through the digits and to set the desired delay time (between 0 to 3600 seconds). Refer to Figure 4-13 for the location of the keys.

Figure 4-13
Setting delay time from the front panel

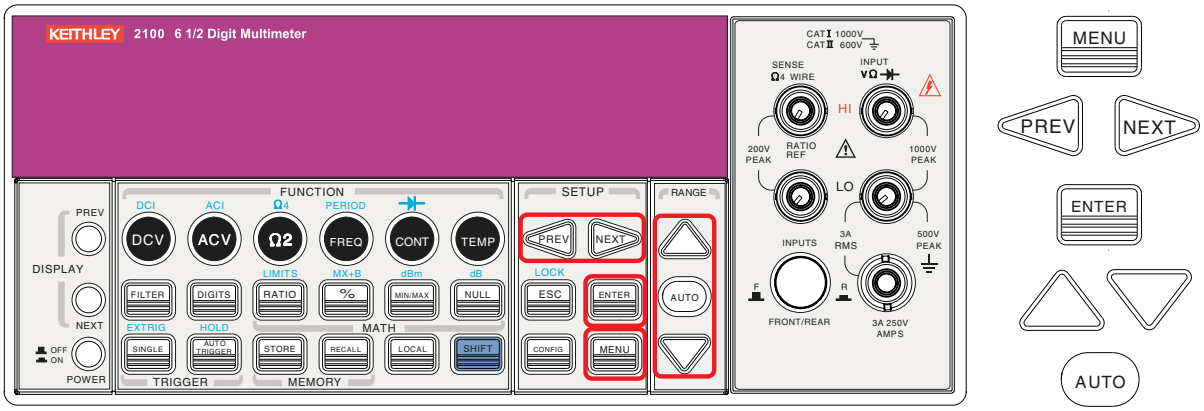

To set the delay time from the remote interface:

You can either set the delay time or set the trigger delay to automatic operation from your PC terminal using these commands:

```
TRIGger:DELay {<seconds>|MINimum|MAXimum}
```

or

```
TRIGger:DELay:AUTO {OFF|ON}
```

Math operations

The Model 2100 Digital Multimeter can perform eight math operations: RATIO, %, Min/Max, NULL, Limits, MX+B, dB, and dBm testing. Data from measurements taken are either stored for later use, or used to perform mathematical operations on the readings. Note that these math operations are available to all measurement functions except continuity and diode testing.

NOTE *The "MATH" annunciator on the display indicates the state of a mathematical feature and will be lit when any math feature (excluding Ratio) is enabled. Press the same keys again to disable the math feature.*

NOTE *When you press the* **RATIO** *key, the "RATIO" annunciator is lit on the display.*

Ratio

Definition

The Ratio function calculates the ratio of an input DC voltage to a reference DC voltage, using the following equation:

$$Ratio = \frac{DC\ input\ voltage}{DC\ reference\ voltage}$$

How to make a Ratio measurement

There are two ways to make a Ratio measurement: Using the front panel, or using a remote interface.

To make a Ratio measurement from the front panel:

1. Use the **INPUTS** button to select the front or rear terminals.
2. Connect the DC input signal to the INPUT HI and LO terminals. Connect the reference signal to the SENSE HI and LO terminals. Connect the SENSE LO to the INPUT LO terminal.
3. Press **CONFIG + RATIO**, then use the **PREV** and **NEXT** keys to select the **RESOLUTION** option (refer to "Resolution settings (digits)") and press **ENTER**.
4. Select the desired value by pressing the **left, right, up,** and **down arrow** keys, then press **ENTER**.
5. To start the Ratio function, press the **RATIO** key and observe the reading on the display (Figure 4-14 shows the location of the keys used).

NOTE *To close this function, press one of the measurement function keys.*

Figure 4-14
Making a Ratio measurement from the front panel

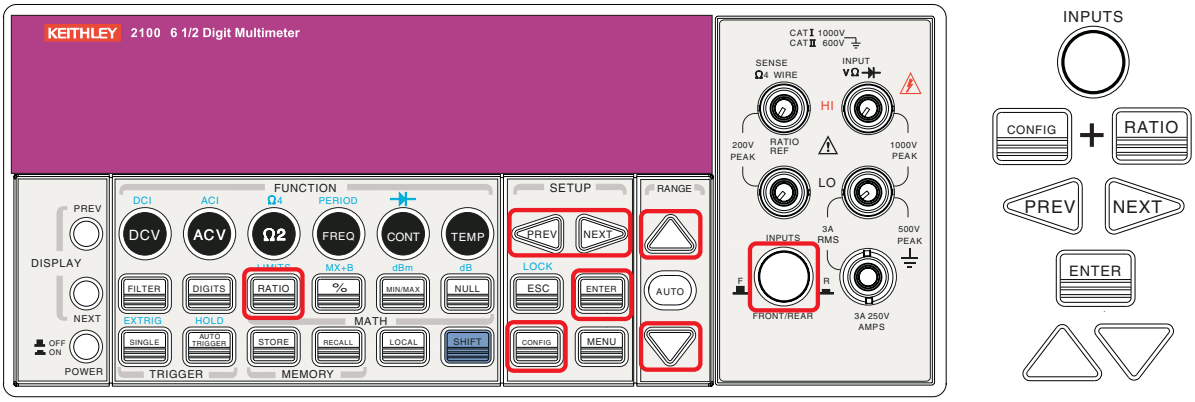

To make a ratio measurement using a remote interface:

Use the following command to make a Ratio measurement:

```
CONFigure:VOLTage:DC:RATio{<range>|MIN|MAX|DEF},{<resolution>|MIN|MAX|DEF}
```

% (Percent)

Definition

This mathematical function calculates the ratio of a measurement reading to a specified target value in the form of a percentage. The calculation formula is shown below:

$$Percent = \frac{Input\ reading \cdot 100}{Target\ value}$$

The specified target value is stored in volatile memory and will be cleared after the meter has been turned-off or a remote interface has been reset.

Making a percent measurement

You can make a percent measurement using the front panel or through a remote interface.

To make a percent measurement using the front panel:

1. To specify a target value, first configure the % function by pressing **CONFIG** + **%**.
2. Use the **PREV** and **NEXT** keys to move through the digits, and the **up** and **down arrow** keys to increase or decrease the numbers to a desired target value.
3. Press **ENTER** to set the value.
4. Press **%** to activate this function, then observe the calculated percent value on the display (Figure 4-15 shows the location of the keys used).

NOTE *Press % again to disable this function. The "MATH" annunciator on the display indicates the state of a mathematical feature.*

Figure 4-15
Making a percent measurement from the front panel

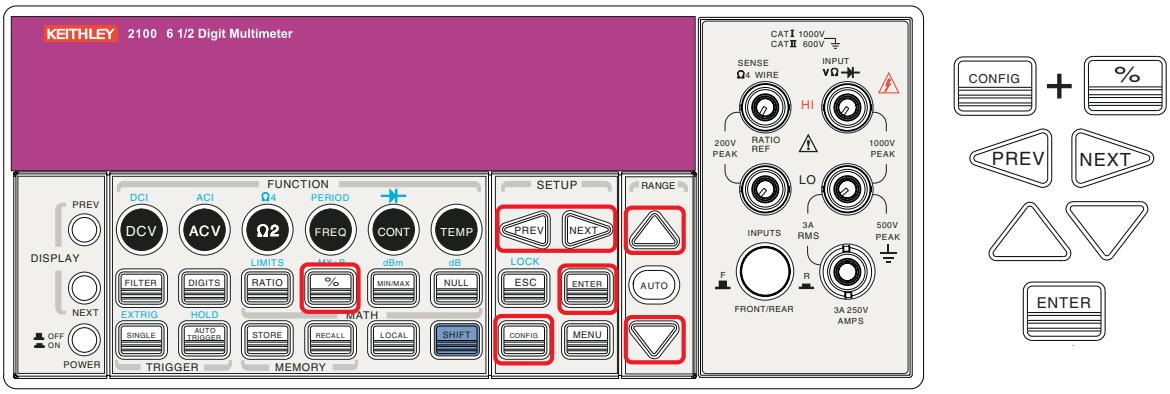

To make a percent measurement from a remote interface:

Use the following commands to enable and configure the % function:

```
CALCulate:FUNCtion PERCent
CALCulate:STATe {OFF|ON}
CALCulate:STATe?
CALCulate:PERCent:TARGet{<value>|MINimum|MAXimum}
CALCulate:PERCent:TARGet? [MINimum|MAXimum
```

MIN/MAX

Definition:

When the MIN/MAX function is enabled, the multimeter takes in a series of readings from the measurements, stores the minimum and maximum readings in memory, and then calculates the average value of all readings. The number of readings taken since the MIN/MAX operation is enabled is also stored in memory. These data are stored in volatile memory and will be cleared when the meter is turned off, when MIN/MAX is turned on, or after a remote interface reset. The meter beeps every time it captures a new minimum or maximum.

Using MIN/MAX

You can use the MIN/MAX feature either through the front panel or a remote interface.

To use the MIN/MAX function from the front panel:

1. First select the measurement function you want to use.
2. Press the **MIN/MAX** key to enable the MIN/MAX function.
3. To read the MIN/MAX value, the average value, or the readings count, press the **CONFIG** key, and then the **MIN/MAX** key. Use the **PREV** and **NEXT** keys to switch between those values (refer to Figure 4-16).

NOTE *Press **MIN/MAX** again to disable this feature. The "MATH" annunciator on the display indicates the state of a mathematical feature.*

Figure 4-16
Using MIN/MAX from the front panel

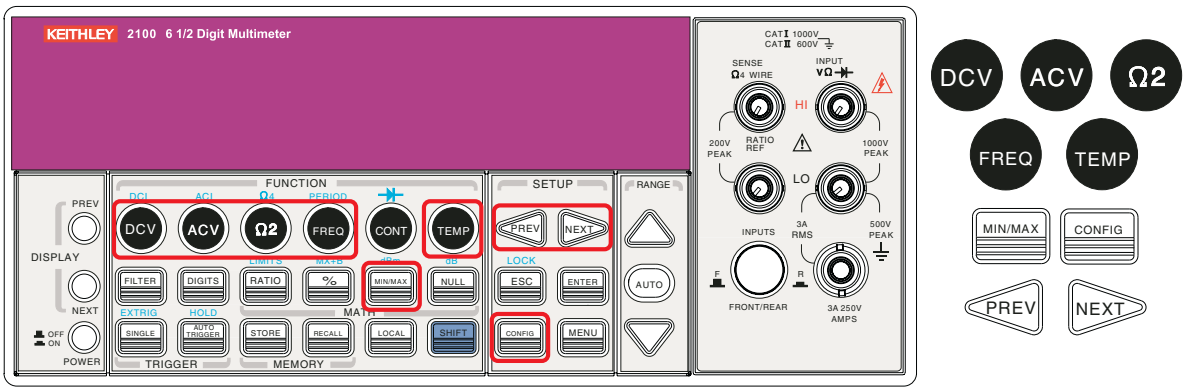

To use the Min/Max function from a remote interface:

The following commands can be used with the Min/Max operation from your PC terminal:

```
CALCulate:FUNCtion AVERage
CALCulate:STATe {OFF|ON}
CALCulate:STATe?
CALCulate:AVERage:MINimum?
CALCulate:AVERage:MAXimum?
CALCulate:AVERage:AVERage?
CALCulate:AVERage:COUNt?
```

Null

Definition

When the Null function is enabled, the displayed measurement reading is the difference between the measured input signal reading and the stored null (also called relative) value. The null (relative) value is stored in volatile memory, which will be cleared when the multimeter is shut off.

You can also specify or alter a null value. The null feature is available for all functions (except continuity and diode). When you select the null feature for a measurement, it is visible only for one measurement.

Using the Null (relative) function

You can activate the **Null** function from either the front panel or a remote interface.

To use the Null function from the front panel:

NOTE *Null measurements can be used with any function except continuity and diode.*

1. To store the null test lead resistance, short/connect the two test leads together and then press the **NULL** key. The new reading taken will replace the old value (if any) in the null register.
2. Connect the two test leads to the input source. The null offset value will show on the display (refer to Figure 4-17 for the keys to use).

The null offset value can also be adjusted manually from the front panel:

1. Press **CONFIG**, then **NULL**.
2. Use the **PREV** and **NEXT** keys to move through the digits, and use the **up** and **down arrow** keys to increase or decrease the numbers to the desired value.
3. Press **ENTER**.

NOTE *Press **NULL** again to disable this feature. The "MATH" annunciator on the display indicates the state of a mathematical feature.*

Figure 4-17
Using the NULL function from the front panel

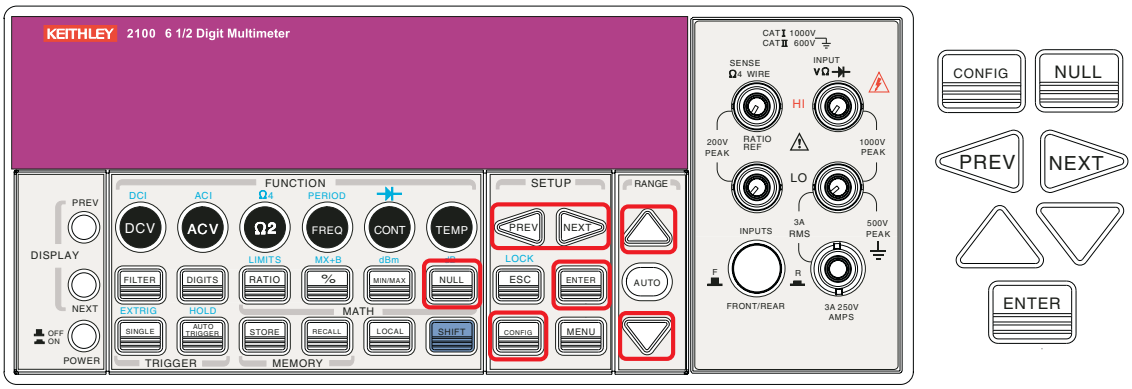

To use the NULL function from a remote interface:

You can use the following commands on your PC terminal to make a Null measurement:

```
CALCulate:FUNCtion
NULLCALCulate:STATe {OFF|ON}
CALCulate:STATe?
CALCulate:NULL:OFFSet {<value>|MAXimum|MINimum}
```

Limits test

Definition

The limits testing operation allows you to adjust maximal and minimal limit values. The multimeter beeps and a "HI" or "LO" message will be shown when the reading exceeds the upper or lower limits. When you specify the limit values, they are stored in volatile memory. The default values for both upper and lower limits are "0." This function can be used with all measurements (except continuity and diode measurements).

Setting limits values or making a limits test

You can set limit values or make a limits test either through the front panel or a remote interface.

To set limits values from the front panel:

1. Configure the Limits math function by pressing **CONFIG** + **SHIFT** + **RATIO,** and then use the **PREV** and **NEXT** keys to select either **MIN** or **MAX**, and press **ENTER**.
2. Use the **PREV** and **NEXT** keys to move through the digits and the **up** and **down arrow** keys to increase or decrease the numbers to a desired value.
3. Press **ENTER** to set the value (refer to Figure 4-18).

Figure 4-18
Configuring the Limits function from the front panel

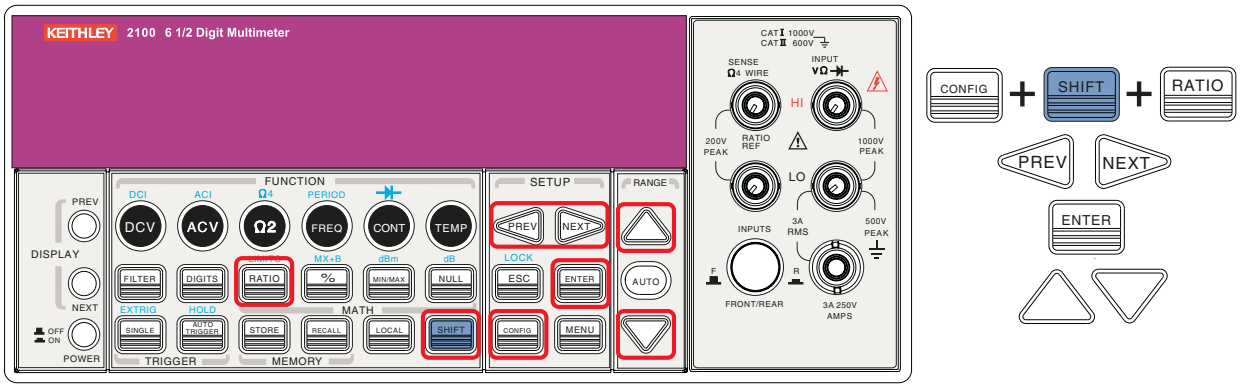

To make a limits test from the front panel:

1. Select any measurement function (except continuity and diode).
2. Enable the Limits function by pressing the **SHIFT** + **RATIO** keys.
3. After enabling the Limits function, you can set the limits values as described above.
4. Observe the displayed reading (refer to Figure 4-19 for the location of the keys to use).

NOTE *Press **SHIFT** + **RATIO** again to disable this feature. The "MATH" annunciator on the display indicates the state of a mathematical feature.*

Figure 4-19
Making a limits test from the front panel

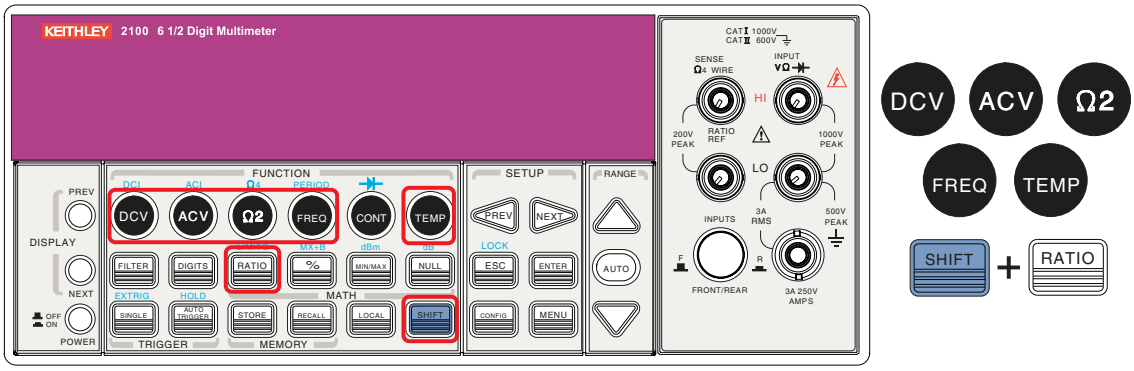

To enable the Limits function or set limits values from a remote interface:

Use the following commands to enable the Limits function or to set the limits values:

```
CALCulate:FUNCtion
LIMitCALCulate:STATe {OFF|ON}
CALCulate:STATe?
CALCulate:LIMit:LOWer {<value>|MINimum|MAXimum}
CALCulate:LIMit:UPPer {<value>|MINimum|MAXimum}
```

MX+B

Definition

This mathematical function multiplies a measurement reading (X) by a specified scale factor (M), and adds an offset (B) automatically. The answer (Y) will then be shown on the display according to the following equation:

$$Y=MX+B$$

This is especially useful when you need to do slope calculations on a series of measurements. The values of the "M" and "B" can be changed through the configuration of this function; these values are stored in volatile memory until the meter has been turned off or the remote interface is reset. You can use either the front panel or remote interface to perform this function and set these two constants.

To use the MX+B function from the front panel:

NOTE *Set the values of M and B before selecting a measurement function.*

1. Set the values of M and B for your math function by pressing **CONFIG** and **SHIFT** + **%**.
2. Use the **PREV** and **NEXT** keys to switch between M and B, and press **ENTER** on your selection.
3. Then use the **PREV** and **NEXT** keys to move through the digits, and use the **up** and **down arrow** keys to increase or decrease the number to the desired value.
4. Press **ENTER** to set the value.
5. Select a measurement function and press **SHIFT** + **%** to activate the MX+B function (refer to Figure 4-20).

Figure 4-20
Using the MX+B function from the front panel

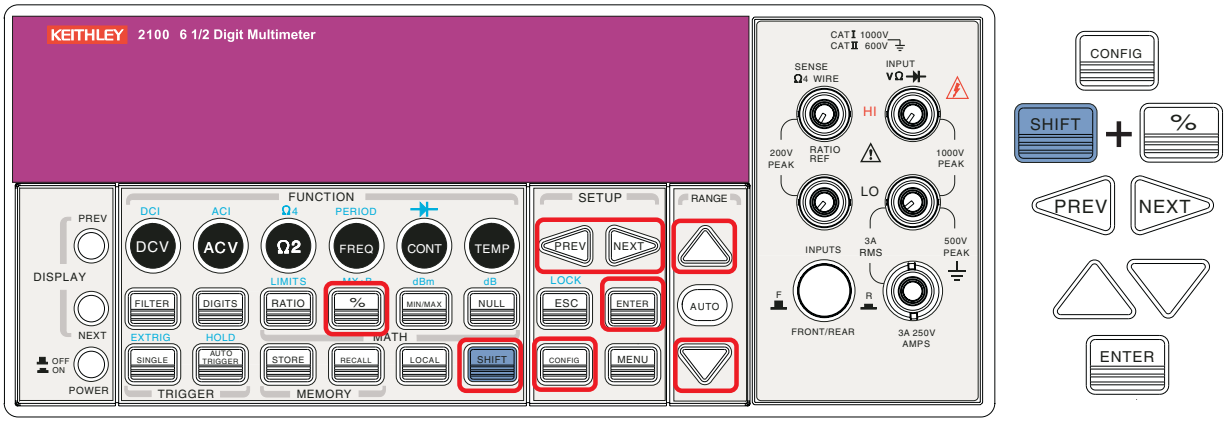

To use the MX+B function from a remote interface:

Use the following commands to enable and configure the MX+B function:

```
CALCulate:FUNCtion MXB
CALCulate:STATe {OFF|ON}
CALCulate:STATe?
CALCulate:MXB:MMFactor {<value>|MINimum|MAXimum}
CALCulate:MXB:MMFactor? [MINimum|MAXimum]
CALCulate:MXB:MBFactor {<value>|MINimum|MAXimum}
CALCulate:MXB:MBFactor? [MINimum|MAXimum]
```

dB

Definition

The **dB** feature takes a DC or AC voltage measurement and displays it in decibel units that correspond with a relative reference value. The calculation of **dB** is listed below:

$$dB = 20 \times \log(Vin / Vref)$$

or

$$dB = (\text{Input signal in dBm}) - (\text{relative value in dBm})$$

NOTE *The Vin is the input signal and the Vref is the relative reference.*

The dB measurement is applied to DC and AC voltage only. The relative value is adjustable (from 0dBm to 200dBm) and is stored in volatile memory.

Setting the relative reference value

You can either manually select a number for the relative reference, or let the multimeter take the first reading (0dB):

To set the relative reference value from the front panel:

1. Press the **CONFIG** + **SHIFT** + **NULL** keys.
2. Use the **PREV** and **NEXT** keys to move through the digits and the **up** and **down arrow** keys to increase or decrease the numbers to the desired value.
3. Press **ENTER** to set the value (refer to Figure 4-21).

Figure 4-21
Setting the relative reference value

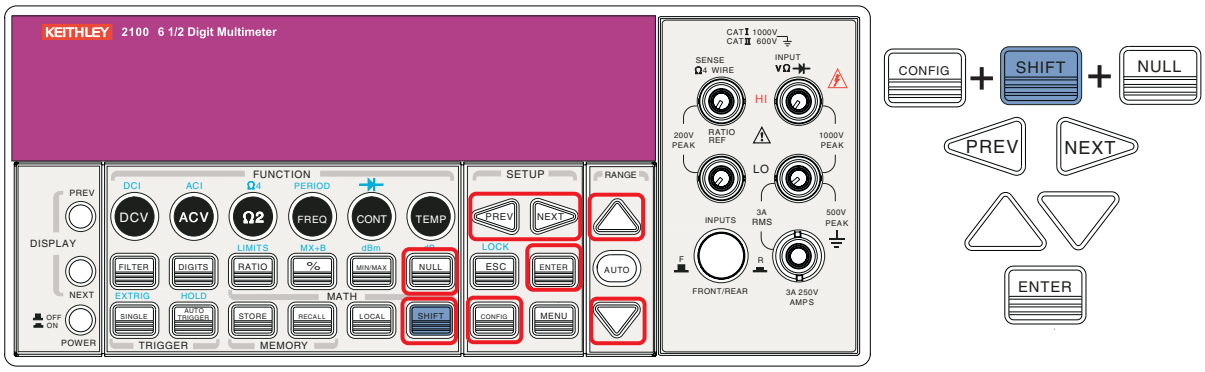

To make a dB measurement from the front panel:

1. Select the measurement function by pressing one of the **DCV** or **ACV** keys.
2. Enable the dB operation by pressing **SHIFT** + **NULL** keys.
3. After enabling the **dB** operation, you can set or alter the **dB** relative value as mentioned above.
4. Observe the displayed reading (refer to Figure 4-22 for the location of the keys used).

NOTE *Press **SHIFT** + **NULL** again to disable this feature. The "MATH" annunciator on the display indicates the state of a mathematical feature.*

Figure 4-22
Making a dB measurement from the front panel

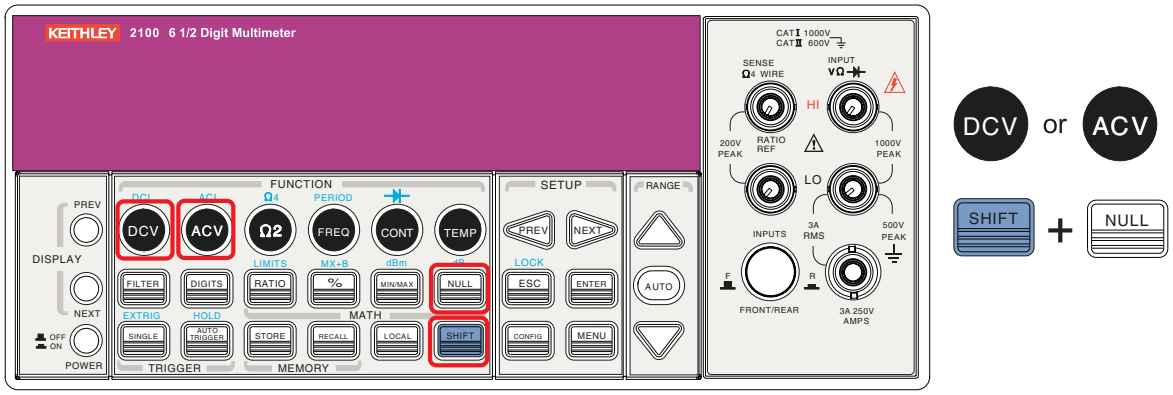

To make a dB measurement from a remote interface:

Use the following commands from your PC terminal to make the dB measurement:

```
CALCulate:FUNCtion DB
CALCulate:STATe {OFF|ON}
CALCulate:STATe?
CALCulate:DB:REFerence {<value>|MINimum|MAXimum}
```

dBm

Definition

With **dBm** selected, a voltage measurement is displayed as the level of power (relative to 1 milliwatt) dissipated through a reference resistance. The reference resistance is adjustable in the Model 2100 Digital Multimeter. The calculation of dBm is defined as below:

$$dBm = 10 \times \log(V^2_{in} / Z_{ref})/1mW$$

NOTE *Vin is the input signal voltage; Zref is the reference resistance. Changing the reference resistance will not affect the stored relative reference value. The Zref is adjustable, with a range from 50Ω to 8000Ω (the default value is 600Ω). The user-selected reference value is stored in volatile memory and will be cleared after the multimeter has been shut-off. This feature is available for DCV and ACV only.*

Setting the reference resistance

You can set the reference resistance either through the front panel or from a remote interface.

To set the reference resistance from the front panel:

1. Press the **CONFIG** + **SHIFT** + **MIN/MAX** keys.
2. Use the **PREV** and **NEXT** keys to move through the digits and the **up** and **down arrow** keys to increase or decrease the numbers to the desired value.
3. Press **ENTER** to set the value (refer to Figure 4-23 for the location of the keys used).

Figure 4-23
Setting the reference resistance from the front panel

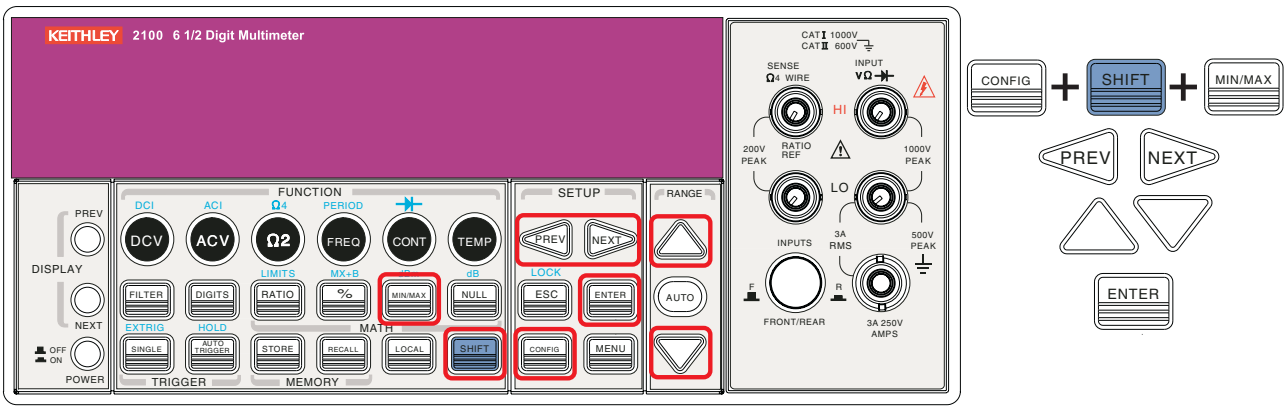

Making a dBm measurement

To make a dBm measurement from the front panel:

1. Select the measurement function by pressing one of the **DCV** or **ACV** keys (the dBm feature is only available for the DCV and ACV functions).
2. Enable the dBm operation by pressing **SHIFT** + **MIN/MAX** keys.
3. After enabling the dBm operation, you can set or alter the dBm relative value as mentioned above.
4. Observe the displayed reading (refer to Figure 4-24 for the location of the keys used).

NOTE *Press **SHIFT** + **MIN/MAX** again to disable this feature. The "MATH" annunciator on the display indicates the state of a mathematical feature.*

Figure 4-24
Making a dBm measurement from the front panel

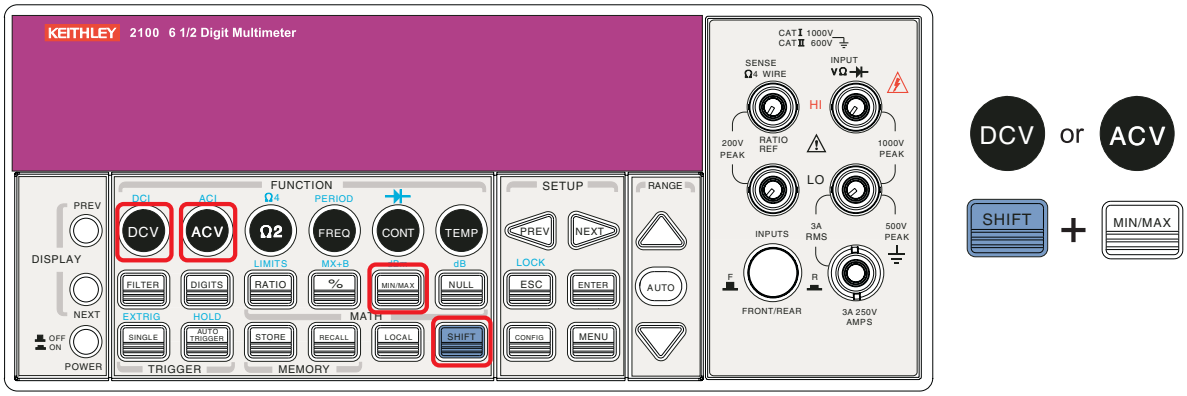

To make a dBm measurement from a remote interface:

Use the following commands from your PC terminal to make the dBm measurement:

```
CALCulate:FUNCtion DBM
CALCulate:STATe {OFF|ON}
CALCulate:STATe?
CALCulate:DBM:REFerence {<value>|MINimum|MAXimum}
```

Other system-related operations

Each system-related operation performs a task that is not measurement-related but plays an important role in making your measurements.

Display

Definition

The Model 2100 Digital Multimeter has a 5x7 dot-matrix, dual display with three-color (white, red and yellow) annunciators for better viewing. A maximum of 13 characters are allowed for upper row dot-matrix display, and a maximum 16 characters are allowed for lower row dot-matrix display (refer to Figure 4-25).

Figure 4-25
The Model 2100 dot-matrix display screen

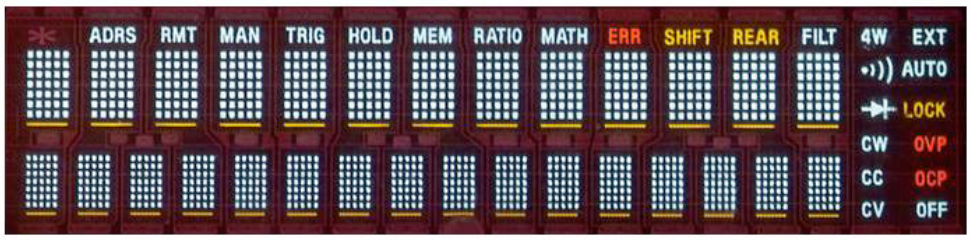

You also have the option to turn off measurement readings on the instrument display for faster measurements. When "OFF" is lit at the lower right corner of the display screen, measurement readings will not be sent to the instrument display, but can be viewed later from a remote interface (note that this does not mean the display is turned-off). This option accelerates the measurement process because there is no I/O delay. Turning-off the measurement readings on the instrument display will not affect the messages displayed from the Recall, Menu, and Config operations.

NOTE *Messages sent from a remote interface (for instance, your PC terminal) will replace the messages on the lower row of the original instrument display.*

Default

The instrument display default is "ON." If you change the "ON/OFF" setting (which is stored in volatile memory), the default setting will be restored when the meter is shut-off.

Controlling the Model 2100 display

You can control the instrument display through the front panel or using a remote interface.

NOTE *Messages sent from a remote interface will have priority over messages sent from the front panel.*

To control the instrument display from the front panel:

1. Press the **MENU** key.
2. Use the **PREV** and **NEXT** keys to select the **SYSTEM** submenu and press **ENTER**.
3. Use the **PREV** and **NEXT** keys to select the **DISPLAY** submenu and press **ENTER**.
4. Use the **PREV** and **NEXT** keys to select either **ON** or **OFF** and press **ENTER** (refer to Figure 4-26).

Figure 4-26
Controlling the display from the front panel

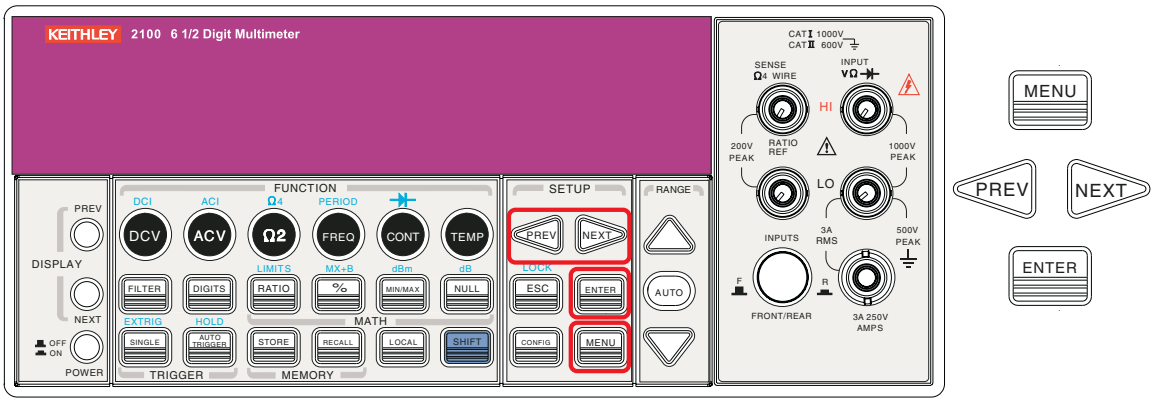

Controlling the display from a remote interface

To control the instrument display from a remote interface:

Use the following commands to control the instrument display, or to send a message to the display:

`DISPlay {OFF|ON}`	Turns the display off or on
`DISPlay:TEXT <quoted string>`	Displays the string you type in
`DISPlay:TEXT:CLEar`	Clears the message displayed

Beeper

Definition

The Model 2100 Digital Multimeter beeps when certain conditions are met or when an error occurs. When you don't want the beeper to sound, you can disable it. Although you can turn off the beeper, the click sound you hear when a key is pressed will not be disabled. The beeper state is stored in volatile memory, and the default will be restored when the meter has been turned-off or after a remote interface reset.

If the beeper is disabled, you will not hear meter beeps when:

- A new minimum or maximum is found in Min/Max operation.
- A stable reading is detected and held.
- The test voltage is within the limits in diode testing.
- The source signal fails the limit testing.

If the beeper is disabled, the meter still emits a tone when:

- An error occurs.
- Any key on the front panel is pressed.
- The threshold value is exceeded in continuity testing.

Default beeper setting

The beeper is enabled when it is shipped from the factory.

Controlling the beeper

You can control the beeper from either the front panel or the remote interface.

To control the beeper from the front panel:

1. Press the **MENU** key then use the **PREV** and **NEXT** keys to select the **SYSTEM** submenu, and press **ENTER**.
2. Use the **PREV** and **NEXT** keys to select the **BEEP** submenu, and press **ENTER**.
3. Use the **PREV** and **NEXT** keys to select **ON** or **OFF** and press **ENTER** (refer to Figure 4-27).

Procedures: MENU → SYSTEM → BEEP → {ON|OFF}

Figure 4-27
Controlling the beeper from the front panel

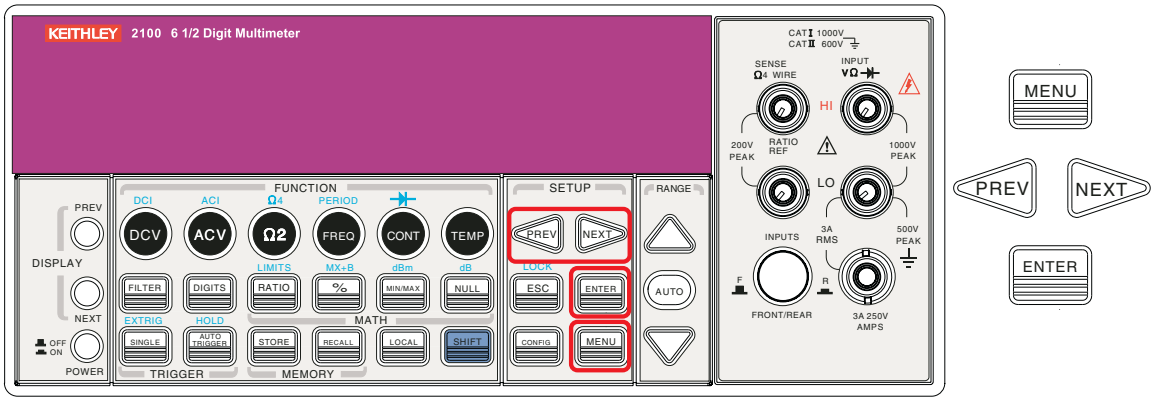

To control the beeper from a remote interface:

Use the following commands to disable or enable the beeper from a remote interface:

```
SYSTem:BEEPer
SYSTem:BEEPer:STATe {OFF|ON}
```

Reading memory (store and recall)

Definition

The Model 2100 Digital Multimeter has a memory capacity of 2000 readings. The readings are stored in first-in-first-out order in volatile memory, which means the stored readings will be cleared

when the multimeter is turned-off. The reading memory feature can be used for all measurement functions, math operations, trigger operations, and reading hold.

Using the reading memory

You can store readings and access those readings through either the front panel or a remote interface.

NOTE *Readings stored from the Model 2100 to a remote interface will be stored in first-in- first-out order.*

To store readings from the front panel:

NOTE *When using the reading memory feature, you first need to select a measurement or math function, then select the trigger mode.*

1. Press the **STORE** key. The multimeter will start to store the readings produced until the specified number of readings is reached. The default number of readings to store is 100.
2. To change number of readings to store, press the **CONFIG** and then **STORE** keys.
3. Use **PREV** and **NEXT** keys to move between the digits and **up** and **down arrow** keys to increase or decrease numbers as desired.

When ready, press **ENTER** (the default number of readings will be restored when the meter has been turned off). Refer to Figure 4-28.

NOTE *The "MEM" annunciator is lit while the multimeter stores readings, and then turned-off when the specified number of readings is reached.*

Procedures: CONFIG + STORE → <NUMBER>

Figure 4-28
Storing readings from the front panel

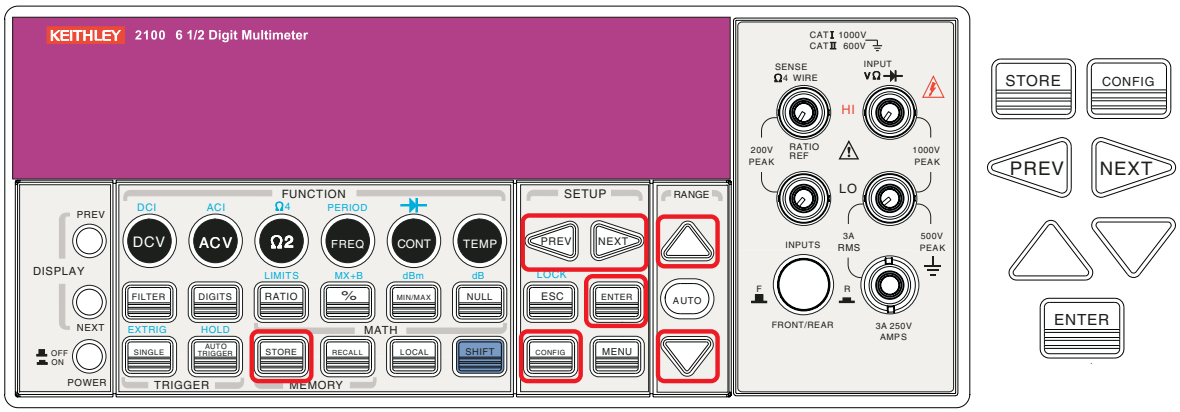

To recall stored readings from the front panel:

1. Press the **RECALL** key. The multimeter will display all the stored readings starting from the first reading.
2. Use the **PREV** and **NEXT** keys or the **up** and **down arrow** keys to move from the first reading to the last reading the meter has stored (refer to Figure 4-29).

Figure 4-29
Recalling readings from the front panel

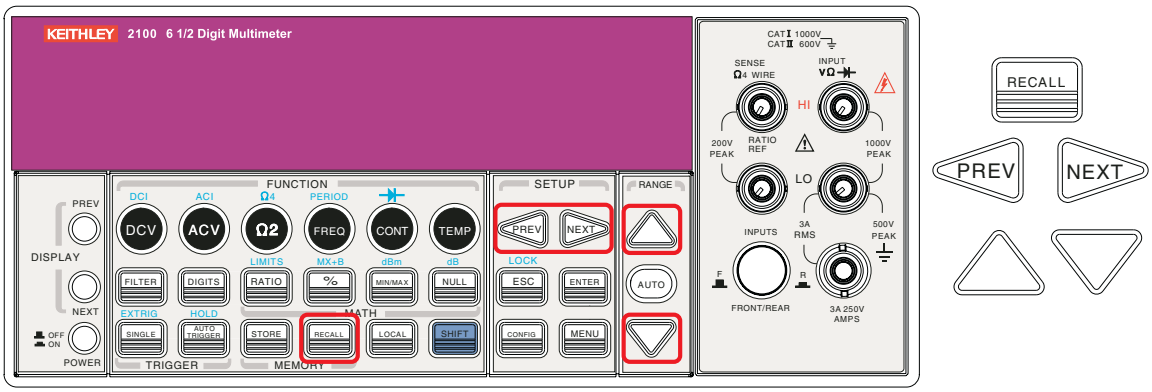

To store or retrieve readings from a remote interface:

Use the following commands from a remote interface to store or retrieve readings:

NOTE *The value set for the Store function only can be set through front panel.*

`INITiate`	Sets the multimeter to "wait-for-trigger" state; after a measurement is taken, measurement readings will be placed in the memory
`FETCh?`	Use this command to retrieve stored readings
`DATA:POINts?`	Use this command to query the number of stored readings

Sensitivity band (Hold)

Definition:

The reading hold function captures and holds a stable reading on the display. The multimeter beeps and holds the value when it detects a stable reading. The sensitivity band in reading hold decides which reading is stable enough. This band is expressed as a percent of reading on the selected range. The multimeter considers a reading stable when three consecutive values are within the band; you can adjust this sensitivity band.

Default

The default band setting is 0.1%. Your setting is stored in a volatile memory, and will be cleared after the meter has been turned-off.

Adjusting the sensitivity band

You can adjust the sensitivity band through the front panel.

To adjust the sensitivity band from the front panel:

1. Press the **MENU** key, then use the **PREV** and **NEXT** arrow keys to select the **TRIG** submenu.
2. Press **ENTER**, then again use the **PREV** and **NEXT** arrow keys to select the **READ HOLD** submenu.
3. Press **ENTER**, then use **PREV** and **NEXT** keys to choose the desired band.
4. Press **ENTER** to set the desired sensitivity band (refer to Figure 4-30).

Figure 4-30
Adjusting the sensitivity band from the front panel

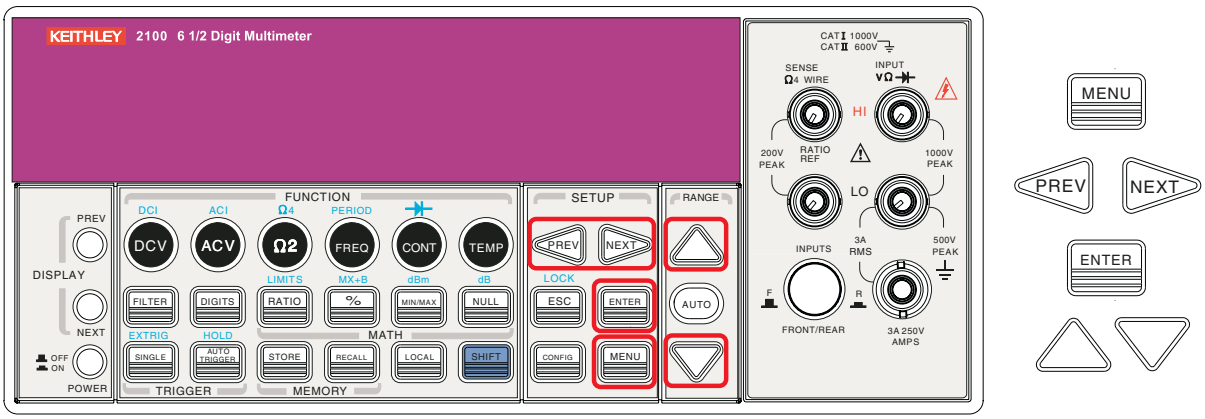

Initial mode

Definition

Initial mode has two settings: **DEFAULT** and **SAVE DATA**. You can select **SAVE DATA** to save the current configuration, or select **DEFAULT** to restore the factory default configuration after restarting the Model 2100. The valid ranges for **SAVE DATA** are listed in Table 4-5.

Table 4-5
Valid values of Save Data

No.	Items of Save Data	Contents
1	Continuity	Threshold resistance
2	Diode	Boundary voltage
3	Temperature	Sensor type & units
4	dBm	Reference resistance
5	mx + B	Values: m, B
6	Reading hold	Sensitivity band

To save settings or restore default settings from the front panel:

1. Press the **MENU** key and use the **PREV** and **NEXT** keys to select the **SYSTEM** submenu.
2. Press **ENTER** and use the **PREV** and **NEXT** keys to select the **INIT MODE** submenu.
3. Press **ENTER**, and use the **PREV** and **NEXT** keys to select either **SAVE DATA** to save your current settings, or **DEFAULT** to return to default settings.
4. Press **ENTER** to save your selection (refer to Figure 4-31).

Figure 4-31
Saving or restoring default settings

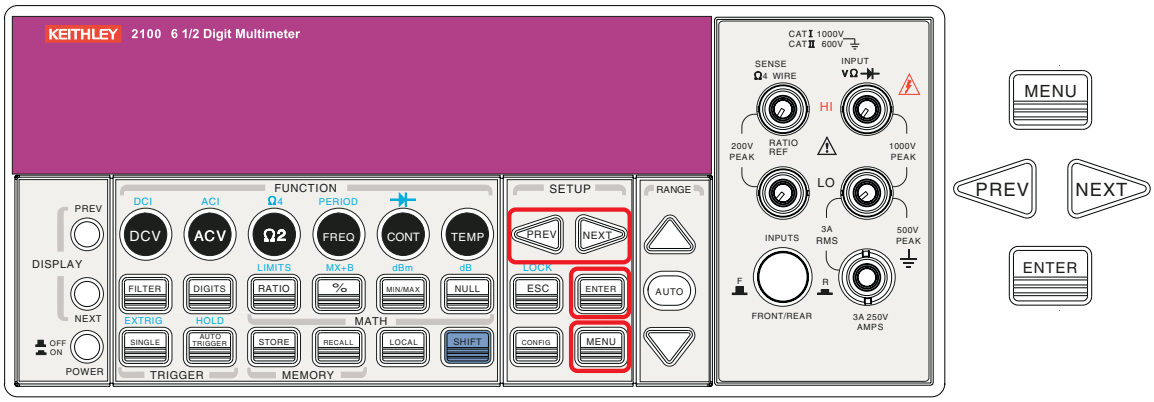

Language

The Model 2100 Digital Multimeter supports two languages: Default and A34401.

To select a language:

1. Press the **MENU** key, and use the **PREV** and **NEXT** keys to select the **SYSTEM** submenu.
2. Press **ENTER**, then use the **PREV** and **NEXT** keys to select the **LANGUAGE** submenu.
3. Press **ENTER**, then use the **PREV** and **NEXT** keys to select either **Default** or **A34401**. Press **ENTER** to save your selection (refer to Figure 4-32).

Figure 4-32
Selecting a language

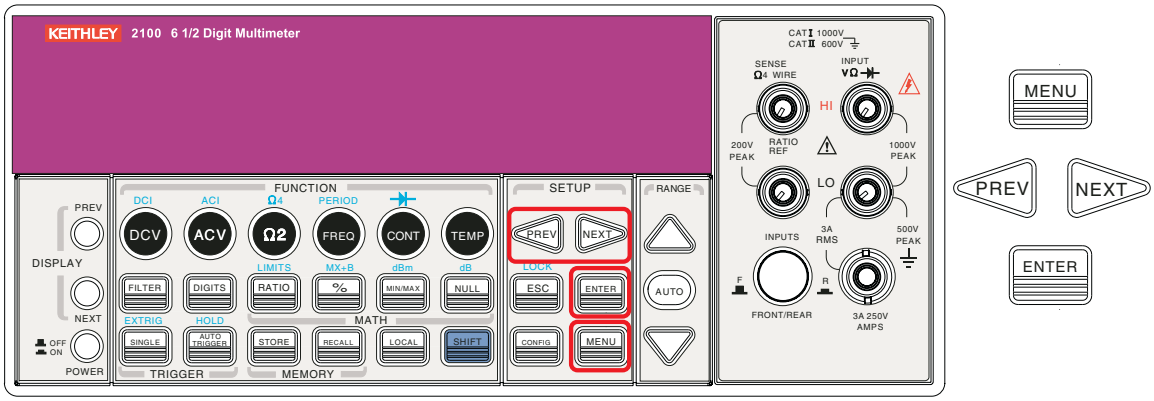

Error condition

The error annunciator on the front panel display alerts you that the multimeter has an error condition. If there are one or more syntax or hardware errors found, the error annunciator will be lit to inform the user. The multimeter stores errors using the first-in-first-out (FIFO) order, and it can record up to 20 errors in the error queue. The first error detected will be the first error retrieved. Refer to Section 6 for the list of error messages.

Also note that:

- The error annunciator will be turned off when you have read the errors in the memory.

- If there is no error found when you check the error queue, the multimeter shows "NO ERRORS."
- If there are more than 20 errors found, the last error in the error queue will be replaced with "-350," which means there are too many errors.
- The error queue is cleared when the multimeter is turned off, or when a *CLS command is received.

To check the error queue:

1. Press the **MENU** key, then use the **PREV** and **NEXT** keys to select the **SYSTEM** submenu.
2. Press **ENTER**, then use the **PREV** and **NEXT** keys to select the **ERROR** option.
3. Press **ENTER**, and the message about the error queue will show on the display (refer to Figure 4-33 for the location of the keys used). See Section 6 for descriptions of error messages.

Figure 4-33
Checking the error queue

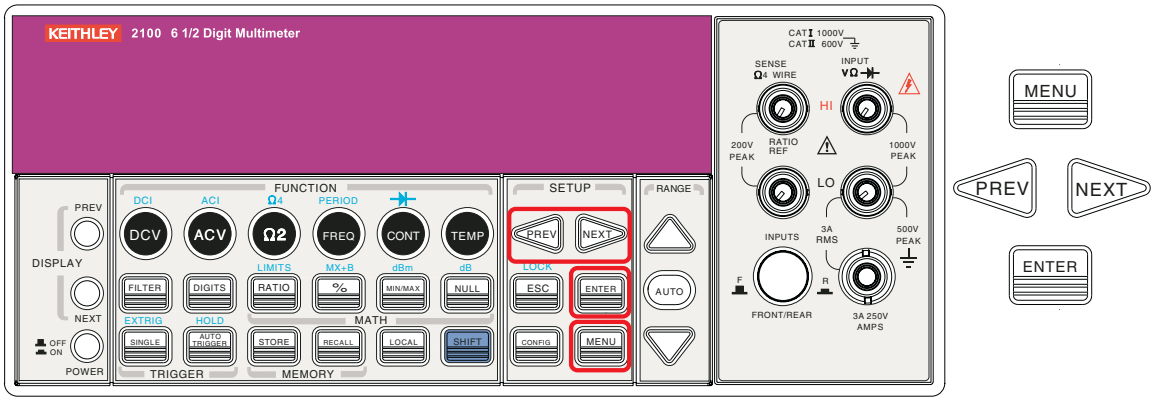

Firmware revision

Definition

The Model 2100 has three microprocessors for various internal systems. You can query the multimeter to determine which revision of firmware is installed for each microprocessor.

To check the firmware revision:

1. Press the **MENU** key and then use the **PREV** and **NEXT** keys to select the **SYSTEM** submenu.
2. Press **ENTER**, then use the **PREV** and **NEXT** keys to select the **SYSTEM VER.** option.
3. Press **ENTER** to select it; a three-part code in xx-xx-xx format will appear on the display. The first part of the code, xx.xx, is the firmware version of the digital signal processor (DSP); the second code, xx, represents the panel microprocessor; and the last code, xx, indicates the front-end processor firmware version (refer to Figure 4-34).

Figure 4-34
Checking the firmware revision

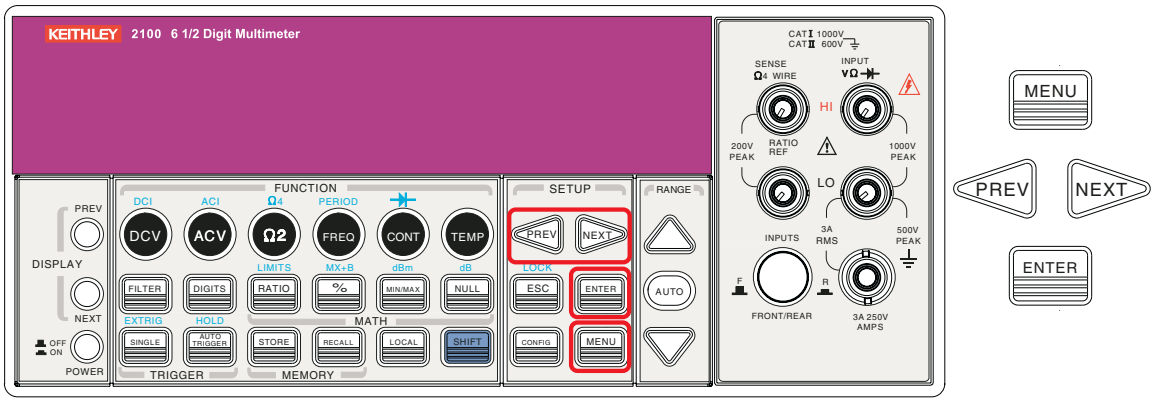

Occasionally, updated firmware for the Model 2100 is released. The Product Information CD-ROM that came with your Model 2100 contains the latest firmware revision available at the time of shipping; you can also download the latest version of the firmware from the Keithley Instruments website, www.keithley.com.

To install updated firmware for the Model 2100:

NOTE *You must have one of the following items installed on your computer in order to obtain the proper VISA layer (Keithley Instruments I/O Layer 5.0 is included on the CD-ROM that came with your Model 2100):*

- Keithley Instruments I/O Layer 5.0 (KIOL-850BO5) or greater
- NI-VISA 3.1 or greater
- Agilent I/O Library Suite 14.2 or greater

1. Connect your Model 2100 to your computer with the included USB cable.
2. Insert the Product Information CD-ROM that came with your Model 2100 into the CD drive of your computer (or navigate to the files you downloaded from the Keithley Instruments website) and double-click the DmmUpdate.exe file to begin the installation of the Model 2100 firmware update.
3. When the 2100 (USBTMC) Update Version window appears, click the Select button (see Figure 4-35).

Figure 4-35
Installing the Model 2100 firmware update

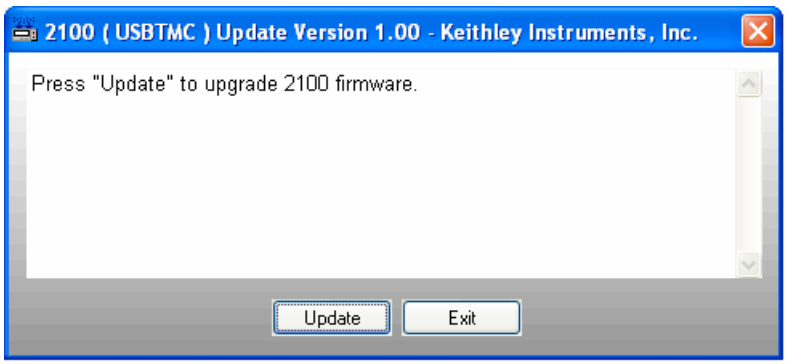

4. The Open dialog box will appear. The files for the front-end firmware and the digital signal processor (DSP) updates are listed (see Figure 4-36):

- 1232_xxx.bin Updates the front-end firmware version
- 5407_xx.xx.bin Updates the DSP firmware version

NOTE *Filenames may vary, depending upon which version of firmware you are installing. The "xx.xx" and "xxx" in the filenames in this example represent alpha-numeric values that denote specific firmware revisions.*

Figure 4-36
The Open dialog box

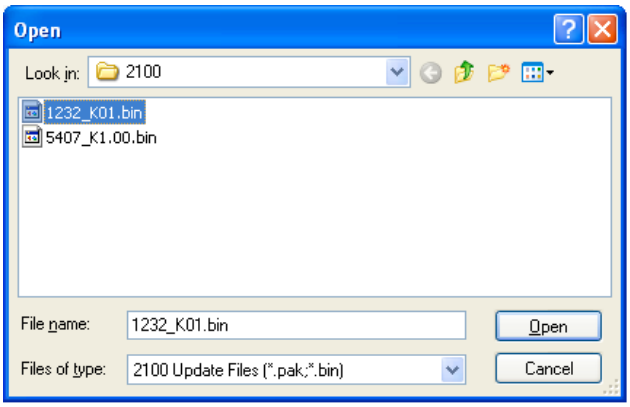

5. Highlight the 5407_xx.xx.bin file and click Open (see Figure 4-36) to start the DSP firmware version update. The 2100 (USBTMC) Update Version window will display a "Please wait" message while the file is executing, as shown in Figure 4-37.

Figure 4-37
Model 2100 firmware upgrade in progress

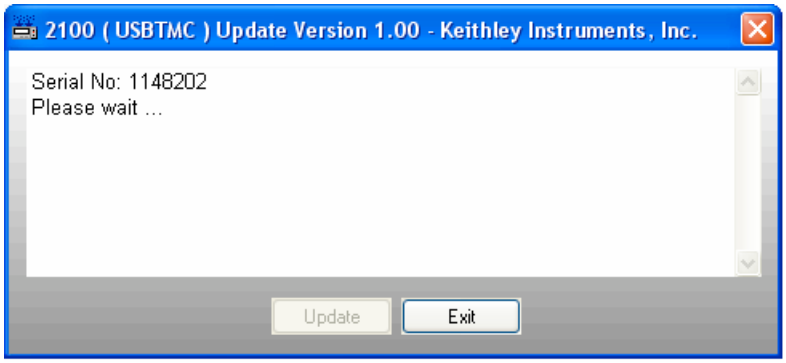

6. Once installation of the DSP firmware update file is complete, you will be prompted to restart your Model 2100 to continue the update (see Figure 4-38). Power the Model 2100 off, and then power it on again.

Figure 4-38
Restart device to complete update message

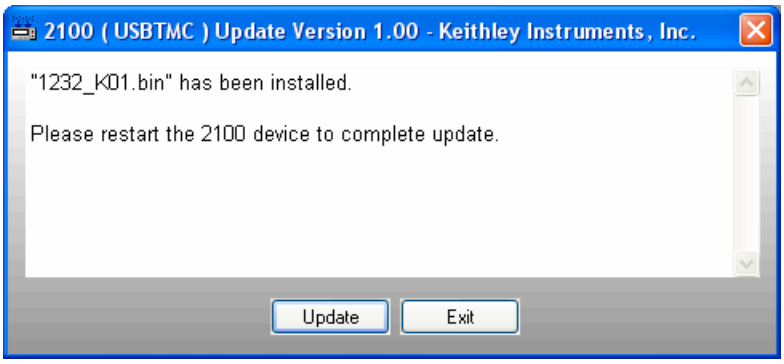

NOTE *An error message may appear on the front-panel display when you restart your Model 2100. If it does, you will need to click Continue and install the front-end firmware revision update file (1232_xxx.bin) following the procedures listed above.*

If you do not receive an error message, you do not need to install the 1232_xxx.bin update file.

7. The 2100 (USBTMC) Update Version window will reappear when the installation is complete. Click Exit to exit the firmware update installation (see Figure 4-38).

To confirm the update has been properly completed, check the firmware revision number (see To check the firmware revision).

Calibration

The Model 2100 will show the latest calibrated date and the next calibration date on the display after following the operation below (refer to Figure 4-39 for the location of the keys used).

To view calibration information:

1. Press the **MENU** key, then use the **PREV** and **NEXT** keys to select the **CALIBRATE** option.
2. Press **ENTER**, then use the **PREV** and **NEXT** keys to switch between the last calibrated date and the next calibration date.

Figure 4-39
Viewing calibration information

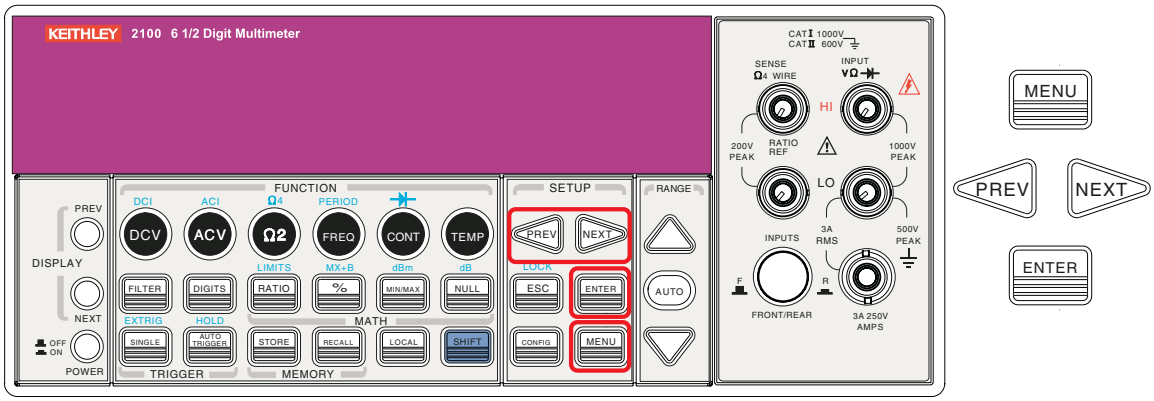

Section 5

Remote Interface Operations

In this section:

Topic	Page
Introduction	5-2
Pass/fail output from the USB connector	5-2
Setting up the remote interface	5-2
Remote interface commands	5-3
Common commands	5-3
Other measurement configuration commands	5-7
Math operation commands	5-7
Triggering	5-8
Triggering commands	5-8
System-related commands	5-9
Status reporting commands	5-9
Other interface commands	5-10

Introduction

The Keithley Instruments Model 2100 6 1/2-Digit Resolution Digital Multimeter has a built-in USB interface for remote interface operations.

This section provides an overview of some of the SCPI commands (Standard Commands for Programmable Instruments) available to control the Model 2100. For a more detailed explanation of SCPI commands, refer to "Appendix B: Remote Interface Reference."

Pass/fail output from the USB connector

The USB connector on the rear panel of the Model 2100 is a series "B" connector. When the USB interface is disabled, the internal pass and fail TTL output signals (limit testing) will be connected to the USB connector.

The Pass/Fail signals are low true and indicate the Math Pass/Fail Limit Test result for the next reading to be output.The signals are active low for approximately 2ms (100sec) for each reading taken.

Table 5-1
USB connector pin out and designations

Contact number	Signal name	Typical wiring assignment	Description
1	VBUS	Red	Floating
2	D-	White	Limit test pass
3	D+	Green	Limit test fail
4	GND	Black	Ground

To enable/disable the Pass/Fail output function:

There are two procedures you can use to enable or disable the Pass/Fail output function:

1. Press the **MENU** key, then use the **PREV** and **NEXT** keys to select **INTERFACE,** and press **ENTER**
2. Next, use the **left** and **right arrow** keys to select **USB**, then press **ENTER.**
3. Use the **left** and **right arrow** keys to select **ENABLE** or **DISABLE**, then press **ENTER**.

Procedure: MENU → INTERFACE → USB → ENABLE/DISABLE

or

1. Press the **CONFIG+SHIFT+RATIO** keys, then use the **left** and **right arrow** keys to select **OUTPUT,** and press **ENTER.**
2. Use the **left** and **right arrow** keys to select **ENABLE** or **DISABLE,** then press **ENTER.**

Procedure: CONFIG+SHIFT+RATIO → OUTPUT → ENABLE/DISABLE

NOTE *You cannot use the USB interface for remote control if you want to enable the Pass/Fail signal output. Disconnect the USB cable from your multimeter to eliminate abnormal output of the Pass/Fail signal.*

Setting up the remote interface

You can use KI-TOOL, 2100 Excel Add-in, and 2100 Word Add-in programs developed by Keithley Instruments to remotely control and configure the Model 2100 multimeter through the USB interface.

To install the software:

NOTE *You must have one of the following items installed on the remote interface in order to obtain the proper VISA layer:*

- *Keithley I/O Layer 5.0 or greater*
- *NI-VISA 3.1 or greater*
- *Agilent I/O Library Suite 14.2 or greater*
  (the Keithley I/O Layer 5.0 is included on the CD-ROM that came with your Model 2100)

1. On the CD-ROM that came with your Model 2100, double-click the **2100.exe** file to start the software installation.
2. Accept all defaults. Select **Next**.
3. Select **Install**.
4. Connect the USB cable between the Model 2100 and the USB port on the remote computer.
5. The "Found New Hardware Wizard" will launch, and you will see a dialogue box asking, "Can Windows connect to Windows Update to search for software?" Select **No**, then **Next**.
6. "USB Test and Measurement device" will appear on the computer screen; select **Next**, then **Finish**.
7. Icons for KI-TOOL, 2100 Excel Add-in, and 2100 Word Add-in will display on the desktop. Double-click any of these to control or configure the Model 2100.

.

Remote interface commands

You can program the multimeter to take measurements using SCPI commands (after appropriately setting up the USB remote interface).

The following conventions are used in SCPI command syntax:

- **Triangle brackets (<>)** indicate that you must specify a value for the enclosed parameter.
- **The square brackets ([ ])** indicate that the parameter is optional and can be omitted.
- **Braces ({})** enclose the parameter choices for a given command string.
- **A vertical bar (|)** separates several choices for a parameter.

Common commands

MEASure?

Definition

Although it does not offer much flexibility, using the **MEASure?** command is the simplest way to program the multimeter for measurements. You can select the measurement function, range, and resolution; then the multimeter automatically sets the other parameters for you, makes the measurement, and sends the results to the output buffer.

Commands: MEASure:

```
VOLTage:DC? {<range>|MIN|MAX|DEF},{<resolution>|MIN|MAX|DEF}
VOLTage:DC:RATio? {<range>|MIN|MAX|DEF },{<resolution>|MIN|MAX|DEF}
VOLTage:AC? {<range>|MIN|MAX|DEF},{<resolution>|MIN|MAX|DEF}
CURRent:DC? {<range>|MIN|MAX|DEF},{<resolution>|MIN|MAX|DEF}
CURRent:AC? {<range>|MIN|MAX|DEF},{<resolution>|MIN|MAX|DEF}
RESistance? {<range>|MIN|MAX|DEF},{<resolution>|MIN|MAX|DEF}
```

```
FRESistance? {<range>|MIN|MAX|DEF},{<resolution>|MIN|MAX|DEF}
FREQuency? {<range>|MIN|MAX|DEF},{<resolution>|MIN|MAX|DEF}
PERiod? {<range>|MIN|MAX|DEF},{<resolution>|MIN|MAX|DEF}
CONTinuity?
DIODe?
TEMPerature?
```

CONFigure:

Definition

The **CONFigure** command offers a little more flexibility than the **MEASure?** command. The multimeter sets the parameters for the requested function, range and resolution, but does not make the measurements. You have an option to change the configuration. To initiate the measurement, use the **INITiate** or **READ?** command.

Commands: CONFigure:

```
VOLTage:DC {<range>|MIN|MAX|DEF},{<resolution>|MIN|MAX|DEF}
VOLTage:DC:RATio {<range>|MIN|MAX|DEF },{<resolution>|MIN|MAX|DEF}
VOLTage:AC {<range>|MIN|MAX|DEF},{<resolution>|MIN|MAX|DEF}
CURRent:DC {<range>|MIN|MAX|DEF},{<resolution>|MIN|MAX|DEF}
CURRent:AC {<range>|MIN|MAX|DEF},{<resolution>|MIN|MAX|DEF}
RESistance {<range>|MIN|MAX|DEF},{<resolution>|MIN|MAX|DEF}
FRESistance {<range>|MIN|MAX|DEF},{<resolution>|MIN|MAX|DEF}
FREQuency {<range>|MIN|MAX|DEF},{<resolution>|MIN|MAX|DEF}
PERiod {<range>|MIN|MAX|DEF},{<resolution>|MIN|MAX|DEF}
CONTinuity
DIODe
TEMPerature
```

CONFigure?

Definition

Query the selected function.

READ?

The **READ?** command changes the state of the trigger system from "idle" to "wait-for-trigger." When the specified trigger condition requirements are met after the multimeter receives the **READ?** command, the measurement will be initiated. The results are sent to the output buffer right away. You must enter the reading data into your bus controller or the multimeter will stop making measurements when the output buffer fills. Readings are not stored in the multimeter's internal memory when using the **READ?** command.

Using the **READ?** command has a similar effect as using the **INITiate** command followed immediately by the **FETCh?** command, except readings are not buffered internally.

INITiate and FETCh?

Definition

These two commands provide the lowest level of control of measurement triggering and reading retrieval, but offer the most flexibility. After you have configured the multimeter, use **INITiate** to change the state of the triggering system from the "idle" to "wait-for-trigger." The multimeter will start the measurements when the specified trigger condition requirements are met (after it receives the **INITiate** command). The results are sent to the internal memory and stored until you are ready to read them.

The **FETCh?** command sends the data in the multimeter's internal memory to the output buffer, where you can read them into your bus controller.

SENSe

Definition

The **SENSe** subsystem is used to configure and control the measurement functions.

NOTE *Default parameters are shown in **bold italic**.*

Commands: [SENSe:]

```
FUNCtion "VOLTage:DC"
FUNCtion "VOLTage:DC:RATio"
FUNCtion "VOLTage:AC"
FUNCtion "CURRent:DC"
FUNCtion "CURRent:AC"
FUNCtion "RESistance" (2-wire Ω)
FUNCtion "FRESistance" (4-wire Ω)
FUNCtion "FREQuency"
FUNCtion "PERiod"
FUNCtion "CONTinuity"
FUNCtion "DIODe"
FUNCtion "TEMPerature"
FUNCtion?
```

[SENSe:]

```
VOLTage:DC:RANGe {<range>|MINimum|MAXimum}
VOLTage:DC:RANGe? [MINimum|MAXimum]
VOLTage:AC:RANGe {<range>|MINimum|MAXimum}
VOLTage:AC:RANGe? [MINimum|MAXimum]
CURRent:DC:RANGe {<range>|MINimum|MAXimum}
CURRent:DC:RANGe? [MINimum|MAXimum]
CURRent:AC:RANGe {<range>|MINimum|MAXimum}
CURRent:AC:RANGe? [MINimum|MAXimum]
RESistance:RANGe {<range>|MINimum|MAXimum}
RESistance:RANGe? [MINimum|MAXimum]
FRESistance:RANGe {<range>|MINimum|MAXimum}
FRESistance:RANGe? [MINimum|MAXimum]
FREQuency:VOLTage:RANGe {<range>|MINimum|MAXimum}
FREQuency:VOLTage:RANGe? [MINimum|MAXimum]
PERiod:VOLTage:RANGe {<range>|MINimum|MAXimum}
PERiod:VOLTage:RANGe? [MINimum|MAXimum]
```

[SENSe:]

```
VOLTage:DC:RANGe:AUTO {OFF|ON}
VOLTage:DC:RANGe:AUTO?
VOLTage:AC:RANGe:AUTO {OFF|ON}
VOLTage:AC:RANGe:AUTO?
CURRent:DC:RANGe:AUTO {OFF|ON}
CURRent:DC:RANGeAUTO?
CURRent:AC:RANGe:AUTO {OFF|ON}
CURRent:AC:RANGe:AUTO?
RESistance:RANGe:AUTO {OFF|ON}
RESistance:RANGe:AUTO?
FRESistance:RANGe:AUTO {OFF|ON}
FRESistance:RANGe:AUTO?
FREQuency:VOLTage:RANGe:AUTO {OFF|ON}
```

```
FREQuency:VOLTage:RANGe:AUTO?
PERiod:VOLTage:RANGe:AUTO {OFF|ON}
PERiod:VOLTage:RANGe:AUTO?
```

[SENSe:]

```
VOLTage:DC:RESolution {<resolution>|MINimum|MAXimum}
VOLTage:DC:RESolution? [MINimum|MAXimum]
VOLTage:AC:RESolution {<resolution>|MINimum|MAXimum}
VOLTage:AC:RESolution? [MINimum|MAXimum]
CURRent:DC:RESolution {<resolution>|MINimum|MAXimum}
CURRent:DC:RESolution? [MINimum|MAXimum]
CURRent:AC:RESolution {<resolution>|MINimum|MAXimum}
CURRent:AC:RESolution? [MINimum|MAXimum]
RESistance:RESolution {<resolution>|MINimum|MAXimum}
RESistance:RESolution? [MINimum|MAXimum]
FRESistance:RESolution {<resolution>|MINimum|MAXimum}
FRESistance:RESolution? [MINimum|MAXimum]
```

[SENSe:]

```
TEMPerature:RTD:TYPE {PT100|D100|F100|PT385|PT3916|USER|SPRTD}
TEMPerature:RTD:TYPE?
TEMPerature:RTD:RZERo {<value>|MINimum|MAXimum}
TEMPerature:RTD:RZERo? {MINimum|MAXimum}
TEMPerature:RTD:ALPHa {<value>|MINimum|MAXimum}
TEMPerature:RTD:ALPHa? {MINimum|MAXimum}
TEMPerature:RTD:BETA {<value>|MINimum|MAXimum}
TEMPerature:RTD:BETA? {MINimum|MAXimum}
TEMPerature:RTD:DELTa {<value>|MINimum|MAXimum}
TEMPerature:RTD:DELTa? {MINimum|MAXimum}
TEMPerature:SPRTD:RZERo {<value>|MINimum|MAXimum}
TEMPerature:SPRTD:RZERo? {MINimum|MAXimum}
TEMPerature:SPRTD:A4 {<value>|MINimum|MAXimum}
TEMPerature:SPRTD:A4? {MINimum|MAXimum}
TEMPerature:SPRTD:B4 {<value>|MINimum|MAXimum}
TEMPerature:SPRTD:B4? {MINimum|MAXimum}
TEMPerature:SPRTD:AX {<value>|MINimum|MAXimum}
TEMPerature:SPRTD:AX? {MINimum|MAXimum}
TEMPerature:SPRTD:BX {<value>|MINimum|MAXimum}
TEMPerature:SPRTD:BX? {MINimum|MAXimum}
TEMPerature:SPRTD:CX {<value>|MINimum|MAXimum}
TEMPerature:SPRTD:CX? {MINimum|MAXimum}
TEMPerature:SPRTD:DX {<value>|MINimum|MAXimum}
TEMPerature:SPRTD:DX? {MINimum|MAXimum}
```

[SENSe:]

```
UNIT {Cel|Far|K}
UNIT?
```

[SENSe:]

```
VOLTage:DC:NPLCycles {0.02|0.1|1|10|MINimum|MAXimum}
VOLTage:DC:NPLCycles? [MINimum|MAXimum]
CURRent:DC:NPLCycles {0.02|0.1|1|10|MINimum|MAXimum}
CURRent:DC:NPLCycles? [MINimum|MAXimum]
RESistance:NPLCycles {0.02|0.1|1|10|MINimum|MAXimum}
RESistance:NPLCycles? [MINimum|MAXimum]
FRESistance:NPLCycles {0.02|0.1|1|10|MINimum|MAXimum}
FRESistance:NPLCycles? [MINimum|MAXimum]
```

[SENSe:]

```
FREQuency:APERture {0.01|0.1|1|MINimum|MAXimum}
FREQuency:APERture? [MINimum|MAXimum]
PERiod:APERture {0.01|0.1|1|MINimum|MAXimum}
PERiod:APERture? [MINimum|MAXimum]
```

[SENSe:]

```
DETector:BANDwidth {3|20|200|MINimum|MAXimum}
DETector:BANDwidth? [MINimum|MAXimum]
[SENSe:]
AVERage:TCONtrol {MOVing|REPeat}
AVERage:TCONtrol?
AVERage:COUNt {<value>|MINimum|MAXimum}
AVERage:COUNt? [MINimum|MAXimum]
AVERage:STATe {OFF|ON}
AVERage:STATe?
```

[SENSe:]

```
ZERO:AUTO {OFF|ONCE|ON}
ZERO:AUTO?
GAIN:AUTO {OFF|ONCE|ON}
GAIN:AUTO?
```

Other measurement configuration commands

[INPut:]

```
IMPedance:AUTO {OFF|ON}
IMPedance:AUTO?
ROUTe:TERMinals?
```

Math operation commands

There are eight math operations. Only one of them can be enabled at a time. They either store data for later use or perform mathematical operations on the readings. Note that these eight math operations are available to all measurement functions except continuity and diode testing.

The math operations use one or more internal registers. You can preset the values in some of the registers by entering constants in some of the commands (e.g., **CALCulate:NULL:OFFSet 0.1**), while others hold the results of the math operations (some commands are the result of a calculation, e.g., **CALCulate:AVERage:MINimum?**).

[CALCulate:]

```
FUNCtion {PERCent|AVERage|NULL|LIMit|MXB|DB|DBM}
FUNCtion?
STATe {OFF|ON}
STATe?
```

[CALCulate:]

```
PERCent:TARGet {<value>|MINimum|MAXimum}
PERCent:TARGet? [MINimum|MAXimum]
```

[CALCulate:]

```
AVERage:MINimum?
AVERage:MAXimum?
```

```
AVERage:AVERage?
AVERage:COUNt?
```

[CALCulate:]

```
NULL:OFFSet {<value>|MINimum|MAXimum}
NULL:OFFSet? [MINimum|MAXimum]
```

[CALCulate:]

```
LIMit:LOWer {<value>|MINimum|MAXimum}
LIMit:LOWer? [MINimum|MAXimum]
LIMit:UPPer {<value>|MINimum|MAXimum}
LIMit:UPPer? [MINimum|MAXimum]
```

[CALCulate:]

```
MXB:MMFactor {<value>|MINimum|MAXimum}
MXB:MMFactor? [MINimum|MAXimum]
MXB:MBFactor {<value>|MINimum|MAXimum}
MXB:MBFactor? [MINimum|MAXimum]
```

[CALCulate:]

```
DB:REFerence {<value>|MINimum|MAXimum}
DB:REFerence? [MINimum|MAXimum]
```

[CALCulate:]

```
DBM:REFerence {<value>|MINimum|MAXimum}
DBM:REFerence? [MINimum|MAXimum]
```

```
DATA:FEED RDG_STORE,{"CALCulate"|""}
DATA:FEED?
```

Triggering

The Model 2100 Digital Multimeter provides a variety of trigger operations: you can select a trigger mode, a trigger source, and different trigger settings for individual measurements. Refer to Figure 4-8 for a trigger operation flow chart.

Triggering from a remote interface is a multi-step sequence. You must first configure the multimeter by choosing the desired function, range, and resolution. Specify the trigger source from which the multimeter will accept the trigger. The multimeter can use an immediate internal trigger, a software trigger from a remote interface, or an external trigger from the rear panel.

NOTE *Before triggering, ensure that the multimeter is in the "wait-for-trigger" state; the multimeter accepts a trigger only when it is in the "wait-for-trigger" state. When you have finished configuring the multimeter and have selected a trigger source, place the multimeter in the "wait-for-trigger" state by using either the* **INITiate***,* **READ?***, or* **MEASure?** *commands (described earlier in this section).*

Triggering commands

```
INITiate
READ?
```

[TRIGger:]

```
SOURce {BUS|IMMediate|EXTernal}
SOURce?
TRIGger:
DELay {<seconds>|MINimum|MAXimum}
DELay? [MINimum|MAXimum]
```

[TRIGger:]

```
DELay:AUTO {OFF|ON}
DELay:AUTO?
```

[SAMPle:]

```
COUNt {<value>| MINimum|MAXimum }
COUNt? [MINmum|MAXimum ]
```

[TRIGger:]

```
COUNt {<value>| MINimum|MAXimum|INFinite }
COUNt? [MINmum|MAXimum]
```

System-related commands

Each system-related operation performs a task that is not measurement-related, but plays an important role in making your measurements.

```
FETCh?
READ?
DISPlay {OFF|ON}
DISPlay?
```

[DISPlay:]

```
TEXT <quoted string>
TEXT?
TEXT:CLEar
```

[SYSTem:]

```
BEEPer
BEEPer:STATe {OFF|ON}
BEEPer:STATe?
SYSTem:ERRor?
SYSTem:VERSion?
DATA:POINts?

*RST
*IDN?
```

Status reporting commands

```
SYSTem:ERRor?
```

[STATus:]

```
QUEStionable:ENABle <enable value>
QUEStionable:ENABle?
QUEStionable:EVENt?
```

```
STATus:PRESet

*CLS
*ESE <enable value>
*ESE?
*ESR?
*OPC
*OPC?
*PSC {0|1}
*PSC?
*SRE <enable value>
*SRE?
*STB?
```

Other interface commands

```
SYSTem:LOCal
SYSTem:REMote
```

IEEE-488.2 common commands

```
*CLS
*ESE <enable value>
*ESE?
*ESR?
*IDN?
*OPC
*OPC?
*PSC {0|1}
*PSC?
*RST
*SRE <enable value>
*SRE?
*STB?
*TRG
```

Section 6

Error Messages

In this section:

Topic	Page
Introduction	6-2
Execution errors	6-2

Introduction

Errors are retrieved from the Keithley Instruments Model 2100 6 1/2-Digit Resolution Digital Multimeter in first-in-first-out (FIFO) order. The first error returned is the first error that was stored. When you have read all errors from the queue, the "ERROR" annunciator turns off. The Model 2100 beeps once each time an error occurs.

If more than 20 errors have been returned, the last error stored in the queue (the most recent error) is replaced with: -350, "Too many errors." No additional errors are saved until you remove errors from the queue and the multimeter responds with: +0, "No error."

The error queue is cleared when power is turned-off or after a ***CLS** (clear status) command has been executed. The ***RST** (reset) command does not clear the error queue.

Execution errors

Table 6-1
Execution error codes

Error code	Description
- 101 Invalid character	An invalid character was found in the command string.
- 102 Syntax error	Invalid syntax was found in the command string.
- 103 Invalid separator	An invalid separator was found in the command string.
- 104 Data type error	A parameter type error was found in the command string.
- 105 GET not allowed	A Group Execute Trigger (GET) is not allowed in the command string.
- 108 Parameter not allowed	More parameters were found than needed for the command.
- 109 Missing parameter	Not enough parameters were received for the command.
- 112 Program mnemonic too long	A command header with too many characters was received.
- 113 Undefined header	An invalid command was received.
- 121 Invalid character in number	An invalid character was found in the number specified for a parameter value.
- 123 Numeric overflow	A numeric parameter with exponent larger than 32000 was found.
- 124 Too many digits	A numeric parameter was found whose mantissa contained more than 255 digits, excluding leading zeros.
- 131 Invalid suffix	A suffix was incorrectly specified for a numeric parameter.
- 138 Suffix not allowed	A suffix was received following a numeric parameter that does not accept a suffix.
- 148 Character not allowed	A discrete parameter was received but a character string or a numeric parameter was expected.

Table 6-1 (continued)
Execution error codes

Error code	Description
- 151 Invalid string data	An invalid character string was received.
- 158 String data not allowed	A character string was received but not allowed for the command.
- 160~-168 Block data errors	Block data is not acceptable.
- 170~-178 Expression errors	The meter does not accept mathematical expressions.
- 211 Trigger ignored	A Group Execute Trigger (GET) or *TRG was received but the trigger was ignored.
- 213 Init Ignored	An **INITiate** command was received but could not be executed because a measurement was already in progress. Send a device clear (*CLS) to halt a measurement in progress and place the meter in the "idle" state.
- 214 Trigger deadlock	A trigger deadlock occurs when the trigger source is BUS and a READ? command is received
- 221 Settings conflict	This error can be generated in one of the following situations: **Situation 1:** You sent a **CONFigure** or **MEASure** command with autorange enabled and with a fixed resolution. **Situation 2:** You turned Math on and then changed to a math operation that was not valid with the present measurement function.
- 222 Data out of range	A numeric parameter value is out of range.
- 223 Too much data	A character string was too long.
- 224 Illegal parameter value	A discrete parameter was received that is not a valid choice for the command.
- 230 Data Stale	A **FETCh?** command was received but the memory was empty.
- 350 Too many errors	The error queue is full.
- 410 Query INTERRUPTED	A command was received that sends data to the output buffer, but the output buffer contained data from a previous command.
- 420 Query UNTERMINATED	The multimeter was addressed to talk (i.e., to send data over the interface) but a command to send data to the output buffer was not received.
- 430 Query DEADLOCKED	A command was received that generates too much data to fit in the output buffer, and the input buffer is also full. Command execution continues, but all data is lost.
- 440 Query UNTERMINATED after indefinite response	The ***IDN?** command must be the last query command within a command string.
521 Input buffer overflow	Too many commands for the input buffer.
522 Output buffer overflow	Too much data requested.

Table 6-1 (continued)
Execution error codes

Error code	Description
531 Insufficient memory	There is not enough memory to store the requested number of readings in internal memory using the **INITiate** command. The product of the sample count (**SAMPle:COUNt**) and the trigger count (**TRIGger:COUNt**) must not exceed 512 readings.
532 Cannot achieve requested resolution	The multimeter cannot achieve the requested measurement resolution. You may have specified an invalid resolution in the **CONFigure** or **MEASure** command.
540 Cannot use overload as math reference	The multimeter cannot store an overload reading (9.90000000E+37) as the math reference for null or dB measurements. The math state is turned off as a result of this condition.
550 Command not allowed in local	The multimeter received a **READ?** command while in the local mode.

Appendix A
Specifications

In this appendix

Topic	Page
Specifications	A-2

KEITHLEY

Model 2100

6 1/2-Digit Resolution Digital Multimeter Specifications

Keithley Instruments, Inc.
28775 Aurora Road
Cleveland, Ohio 44139
1-888-KEITHLEY
www.keithley.com

1. SPECIFICATION LIST

DC characteristics: Accuracy[1] ± (% of reading + % of range)

Function	Range	Resolution	Input resistance	1 year (23°C ± 5°C)
DC voltage	100.0000mV	0.1uV	> 10GΩ	0.0055 + 0.0040
	1.000000V	1.0uV	> 10GΩ	0.0045 + 0.0008
	10.00000V	10uV	> 10GΩ	0.0038 + 0.0006
	100.0000V	100uV	10MΩ	0.0050 + 0.0007
	1000.000V	1mV	10MΩ	0.0055 + 0.0010

Function	Range	Resolution	Shunt resistance	1 Year (23°C ± 5°C)
DCI (DC current)	10.00000mA	10nA	5.1Ω	0.055 + 0.025
	100.0000mA	100nA	5.1Ω	0.055 + 0.006
	1.000000A	1uA	0.1Ω	0.120 + 0.015
	3.00000A	10uA	0.1Ω	0.150 + 0.025

[1] Specifications valid after 2-hour warm-up:
a. ADC set for continuous trigger operation.
b. Input bias current <30pA at 25 °C.
c. Input protection 1000V all ranges (2-W input).
d. Measurement rate set to 1 PLC.

Keithley Instruments, Inc.
28775 Aurora Road
Cleveland, Ohio 44139
1-888-KEITHLEY
www.keithley.com

Function	Range	Resolution	Test current	1 year (23°C ± 5°C)
Resistance[2]	100.0000Ω	100uΩ	1mA	0.015 + 0.005
	1.000000kΩ	1mΩ	1mA	0.015 + 0.002
	10.00000kΩ	10mΩ	100uA	0.013 + 0.002
	100.0000kΩ	100mΩ	10uA	0.015 + 0.002
	1.000000MΩ	1Ω	5uA	0.017 + 0.002
	10.00000MΩ	10Ω	500nA	0.045 + 0.002
	100.0000MΩ	100Ω	500nA||10MΩ	1.00 + 0.020
Diode test	1.0000V	10uV	1mA	0.040 + 0.020
Continuity	1000.00Ω	10mΩ	1mA	0.024 + 0.030

Measurement noise rejection DC (60Hz / 50Hz)

Rate	Digits	CMRR[3]	NMRR[4]
10PLC	6 1/2	140dB	60dB
1PLC	5 1/2	140dB	60dB

Temperature (RTD)

		4-WIRE ACCURACY[5]
Range	**Resolution**	**1 Year**
-100°C to + 100°C	0.001°C	±0.1°C
-200°C to + 630°C	0.001°C	±0.2°C

RTD TYPE: 100Ω platinum (PT100), D100, F100, PT385, or PT3916

MAXIMUM LEAD RESISTANCE (each lead): 12Ω (to achieve rated accuracy).

SENSOR CURRENT: 1mA (pulsed).

---

[2] Specifications for 4-W ohms mode. For 2-W ohms, use zero null or subtract lead resistance from displayed reading.
a. Max lead resistance 10% of range per lead for 100Ω and 1kΩ ranges; add 1kΩ per lead for all other ranges.

[3] For 1kΩ unbalance in LO lead.

[4] For line frequency ± 0.1%.

[5] Excluding probe errors. 23°C ±5°C.

Specifications are subject to change without notice.

Keithley Instruments, Inc.
28775 Aurora Road
Cleveland, Ohio 44139
1-888-KEITHLEY
www.keithley.com

AC characteristics: Accuracy[6] ± (% of reading + % of range)

Function	Range	Frequency (Hz)	1 Year (% of reading) 23º C ± 5º C
Frequency and Period	100mV to 750V[7]	3-5	0.10
		5-40	0.05
		40-300k	0.01

Function	Range	Resolution	Frequency (Hz)	1 year (23°C ± 5°C)
ACV (AC TRMS voltage)	100.0000mV	0.1uV	3-5	1.15 + 0.05
			5-10	0.45 + 0.05
			10-20k	0.08 + 0.05
			20k-50k	0.15 + 0.06
			50k-100k	0.70 + 0.09
			100k-300k	4.25 + 0.60
	1.000000V to 750.000V[8]	1.0uV To 1mV	3-5	1.10 + 0.04
			5-10	0.4 + 0.04
			10-20k	0.08 + 0.04
			20k-50k	0.14 + 0.06
			50k-100k	0.70 + 0.08
			100k-300k	4.35 + 0.50
ACI (AC TRMS current)	1.000000A	1uA	3-5	1.10 + 0.05
			5-10	0.40 + 0.05
			10-5k	0.15 + 0.05
	3.000000A	10uA	3-5	1.25 + 0.07
			5-10	0.45 + 0.07
			10-5k	0.20 + 0.07

[6] Specifications valid for 2-hour warm-up at 6 1/2 digits:
a. Slow ac filter (3Hz bandwidth).
b. Pure sine wave input greater than 5% of range.

[7] 750Vac range is limited to 100kHz.

[8] 750Vac range is limited to 100kHz.

Keithley Instruments, Inc.
28775 Aurora Road
Cleveland, Ohio 44139
1-888-KEITHLEY
www.keithley.com

2. GENERAL SPECIFICATIONS

Item	Limitation and description
AC CMRR[9]	70dB
Power supply	120V/220V/240V
Power line frequency	50/60Hz auto detected
Power consumption	25VA max
Operating temperature	5°C to 40°C
Operating humidity	Maximum relative humidity 80% for temperature up to 31°C, decreasing linearly to 50% relative humidity at 40°C
Storage temperature	-25°C to 65 °C
Operating altitude	Up to 2000 meters above sea level
Bench dimensions (with handles and feet)	112mm high x 256mm wide x 375 deep (4.4 in x 10.1 in x 14.75 in)
Weight	4.1 kg / 9 lbs
Safety	Conforms to European Union Directive 73/23/ECC, EN61010-1
EMC	Conforms to European Union Directive 89/336/EEC, EN61326-1
Warranty	One year
Environment	For indoor use only
Digital I/O interface	USB - compatible Type B connection

[9] For 1kΩ unbalance LO lead.

This page left blank intentionally.

Appendix B

Remote Interface Reference

In this appendix:

Topic	Page
An introduction to SCPI language	B-2
Command format used in this manual	B-2
SCPI parameter types	B-4
Output data formats	B-5
The MEASure? command	B-6
The CONFigure command	B-7
The measurement configuration command	B-9
The math operation command	B-14
The triggering commands	B-17
The system-related commands	B-18
Other interface commands	B-20
Status reporting commands	B-20
Model 2100-specific SCPI compliance information	B-22
IEEE-488 compliance information	B-24
About application programs	B-24
Visual Basic 6 programming example 1: MEASure.bas	B-24
Visual Basic programming example 2: CONFigure	B-27
Visual C++ programming example: DEVQUERY	B-29

An introduction to SCPI language

SCPI (Standard Commands for Programmable Instruments) is an ASCII-based instrument command language designed for test and measurement instruments.

SCPI commands are based on a hierarchical structure, also known as a tree system. In this system, associated commands are grouped together under a common node or root, thus forming subsystems. A portion of the SENSe subsystem is shown below to illustrate the tree system.

[SENSe:]

```
VOLTage:
   DC:RANGe {<range>|MINimum|MAXimum}
VOLTage:
   DC:RANGe? [MINimum|MAXimum]

FREQuency:
   VOLTage:RANGe {<range>|MINimum|MAXimum}
FREQuency:
   VOLTage:RANGe? [MINimum|MAXimum]
DETector:
   BANDwidth {3|20|200|MINimum|MAXimum}
DETector:
   BANDwidth? [MINimum|MAXimum]
ZERO:
   AUTO {OFF|ONCE|ON}
ZERO:
   AUTO?
```

SENSe is the root keyword of the command; VOLTage, FREQuency, DETector, and ZERO are second-level keywords; and DC, VOLTage, BANDwidth, and AUTO are third-level keywords. A colon (:) separates a command keyword from a lower-level keyword.

Command format used in this manual

The format used to show commands in this manual is shown below:

VOLTage:DC:RANGe {<range>|MINimum|MAXimum}

The command syntax shows most commands (and some parameters) as a mixture of upper and lowercase letters. The uppercase letters indicate the abbreviated spelling for the command. For shorter program lines, send the abbreviated form. For better program readability, send the long form. For example, in the above syntax statement, VOLT and VOLTAGE are both acceptable forms. You can use upper or lowercase letters. Therefore, VOLTAGE, volt, and Volt are all acceptable. Other forms, such as VOL and VOLTAG, will generate an error.

Braces ({ }) enclose the parameter choices for a given command string (do not type the braces in the command string).

A vertical bar (|) separates multiple parameter choices for a given command string.

Triangle brackets (< >) indicate that you must specify a value for the enclosed parameter. For example, the above syntax statement shows the range parameter enclosed in triangle brackets (do not type the brackets in the command string). You must specify a value for the parameter (such as "VOLT:DC:RANG 10").

Some parameters are enclosed in square brackets ([ ]). The brackets indicate that the parameter is optional and can be omitted (do not type the brackets in the command string). If you do not specify a value for an optional parameter, the multimeter chooses a default value.

Using the MIN and MAX parameters

You can substitute **MINimum** or **MAXimum** in place of a parameter for many commands. For example, consider the following command:

```
VOLTage:DC:RANGe {<range>|MINimum|MAXimum}
```

Instead of selecting a specific voltage range, you can substitute **MIN** to set the range to its minimum value or **MAX** to set the range to its maximum value.

Querying parameter settings

You can query the current value of most parameters by adding a question mark (?) to the command. The following command sets the sample count to 10 readings:

```
"SAMP:COUN 10"
```

Then you can query the sample count by executing:

```
"SAMP:COUN?"
```

You can also query the minimum or maximum count allowed using the following commands:

```
"SAMP:COUN? MIN"
"SAMP:COUN? MAX"
```

NOTE *If you send two query commands without reading the response from the first, and then attempt to read the second response, you may receive some data from the first response followed by the complete second response. To avoid this, do not send a query command without reading the response. When you cannot avoid this situation, send a device clear before sending the second query command.*

SCPI command terminators

A command string sent to the multimeter must terminate with a <new line> character. The IEEE-488 EOI (end-or-identify) message is interpreted as a <new line> character and can be used to terminate a command string in place of a <new line> character. A <carriage return> followed by a <new line> is also accepted. Command string termination will always reset the current SCPI command path to the root level.

IEEE-488.2 common commands

The IEEE-488.2 standard defines a set of common commands that perform functions like reset, self-test, and status operations. Common commands always begin with an asterisk (*), are four to five characters in length, and may include one or more parameters. The command keyword is separated from the first parameter by a blank space.

Use a semicolon (;) to separate multiple commands as shown below:

```
"*RST; *CLS; *ESE 32; *OPC?"
```

SCPI parameter types

The SCPI language defines several different data formats to be used in program messages and response messages:

Numeric parameters

Commands that require numeric parameters will accept all commonly used decimal representations of numbers including optional signs, decimal points, and scientific notation.

Special values for numeric parameters like **MINimum**, **MAXimum**, and **DEFault** are also accepted. You can also send engineering unit suffixes with numeric parameters (e.g., M, K, or u). If only specific numeric values are accepted, the multimeter will automatically round the input numeric parameters. The following command uses a numeric parameter:

```
VOLTage:DC:RANGe {<range>|MINimum|MAXimum}
```

Discrete parameters

Discrete parameters are used to program settings that have a limited number of values (i.e., **BUS**, **IMMediate**, **EXT**ernal). They have a short form and a long form just like command keywords. You can mix upper- and lowercase letters. Query responses will always return the short form in all uppercase letters. The following command uses discrete parameters:

```
TRIGger:SOURce {BUS|IMMediate|EXTernal}
```

Boolean parameters

Boolean parameters represent a single binary condition that is either true or false. For a false condition, the multimeter will accept "OFF" or "0". For a true condition, the multimeter will accept "ON" or "1". When you query a Boolean setting, the instrument will always return "0" or "1". The following command uses a Boolean parameter:

```
INPut:IMPedance:AUTO {OFF|ON}
```

String parameters

String parameters can contain virtually any set of ASCII characters. A string must begin and end with matching quotes; either with a single quote or with a double quote. You can include the quote delimiter as part of the string by typing it twice without any characters in between. The following command uses a string parameter:

```
DISPlay:TEXT <quoted string>
```

Output data formats

Output data will be in one of formats listed below.

Types of output data

- Non-reading queries
- Single reading (RS-232)
- Multiple readings (RS-232)

Output data format

- < 80 ASCII character string
- SD.DDDDDDDDESDD<nl>
- SD.DDDDDDDDESDD,...,...,<nl>
- SD.DDDDDDDDESDD<cr><nl>
- SD.DDDDDDDDESDD,...,...,<cr><nl>

- **S** Negative sign or positive sign
- **D** Numeric digits
- **E** Exponent
- **<nl>** newline character
- **<cr>** carriage return character

The MEASure? command

MEASure:VOLTage:DC? {<range>|MIN|MAX|DEF},{<resolution>|MIN|MAX|DEF}

Preset and make a DC voltage measurement with the specified range and resolution. The reading is sent to the output buffer.

MEASure:VOLTage:DC:RATio? {<range>|MIN|MAX|DEF },{<resolution>|MIN|MAX|DEF}

Preset and make a DC:DC ratio measurement with the specified range and resolution. The reading is sent to the output buffer. For ratio measurements, the specified range applies to the input signal, yet AUTO range is selected for the reference signal.

MEASure:VOLTage:AC? {<range>|MIN|MAX|DEF},{<resolution>|MIN|MAX|DEF}

Preset and make an AC voltage measurement with the specified range and resolution. The reading is sent to the output buffer. For AC measurements, resolution is fixed at 6 1/2 digits, therefore the resolution parameter only affects the front panel display.

MEASure:CURRent:DC? {<range>|MIN|MAX|DEF},{<resolution>|MIN|MAX|DEF}

Preset and make a DC current measurement with the specified range and resolution. The reading is sent to the output buffer.

MEASure:CURRent:AC? {<range>|MIN|MAX|DEF},{<resolution>|MIN|MAX|DEF}

Preset and make an AC current measurement with the specified range and resolution. The reading is sent to the output buffer. For AC measurements, resolution is fixed at 6 1/2 digits; therefore the resolution parameter only affects the front panel display.

MEASure:RESistance? {<range>|MIN|MAX|DEF},{<resolution>|MIN|MAX|DEF}

Preset and make a 2-wire Ohms measurement with the specified range and resolution. The reading is sent to the output buffer.

MEASure:FRESistance? {<range>|MIN|MAX|DEF},{<resolution>|MIN|MAX|DEF}

Preset and make a 4-wire Ohms measurement with the specified range and resolution. The reading is sent to the output buffer.

MEASure:FREQuency? {<range>|MIN|MAX|DEF},{<resolution>|MIN|MAX|DEF}

Preset and make a frequency measurement with the specified range and resolution. The reading is sent to the output buffer. For frequency measurements, the meter uses only one "range" for all inputs between 3Hz and 300kHz. With no input signal applied, frequency measurements return "0."

MEASure:PERiod? {<range>|MIN|MAX|DEF},{<resolution>|MIN|MAX|DEF}

Preset and make a period measurement with the specified range and resolution. The reading is sent to the output buffer. For period measurements, the meter uses only one "range" for all inputs between 0.33 seconds and 3.3 µsec. With no input signal applied, period measurements return "0."

MEASure:TEMPerature?

Preset and make and make a temperature measurement with an RTD. The reading is sent to the output buffer.

MEASure:CONTinuity?

Preset and make a continuity measurement. The reading is sent to the output buffer. The range and resolution are fixed at 1kΩ and 5 1/2 digits respectively.

MEASure:DIODe?

Preset and make a diode measurement. The reading is sent to the output buffer. The range and resolution are fixed at 1VDC with 1mA current source and 5 1/2 digits respectively.

The CONFigure command

CONFigure:VOLTage:DC {<range>|MIN|MAX|DEF},{<resolution>|MIN|MAX|DEF}

Preset and configure the multimeter for DC voltage measurements with the specified range and resolution. This command does not initiate the measurement.

CONFigure:VOLTage:DC:RATio {<range>|MIN|MAX|DEF },{<resolution>|MIN|MAX|DEF}

Preset and configure the multimeter for DC:DC ratio measurements with the specified range and resolution. This command does not initiate the measurement. The specified range applies to the source signal, and autorange is selected for the reference signal.

CONFigure:VOLTage:AC {<range>|MIN|MAX|DEF},{<resolution>|MIN|MAX|DEF}

Preset and configure the multimeter for AC voltage measurements with the specified range and resolution. This command does not initiate the measurement. For AC measurement, resolution is fixed at 6 1/2 digits, therefore the resolution parameter only affects the front panel display.

CONFigure:CURRent:DC {<range>|MIN|MAX|DEF},{<resolution>|MIN|MAX|DEF}

Preset and configure the multimeter for DC current measurements with the specified range and resolution. This command does not initiate the measurement.

CONFigure:CURRent:AC {<range>|MIN|MAX|DEF},{<resolution>|MIN|MAX|DEF}

Preset and configure the multimeter for AC current measurements with the specified range and resolution. This command does not initiate the measurement. For AC measurement, resolution is fixed at 6 1/2 digits, therefore the resolution parameter only affects the front panel display.

CONFigure:RESistance {<range>|MIN|MAX|DEF},{<resolution>|MIN|MAX|DEF}

Preset and configure the multimeter for 2-wire Ohms measurements with the specified range and resolution. This command does not initiate the measurement.

CONFigure:FRESistance {<range>|MIN|MAX|DEF},{<resolution>|MIN|MAX|DEF}

Preset and configure the multimeter for 4-wire Ohms measurements with the specified range and resolution. This command does not initiate the measurement.

CONFigure:FREQuency {<range>|MIN|MAX|DEF},{<resolution>|MIN|MAX|DEF}

Preset and configure the multimeter for frequency measurements with the specified range and resolution. This command does not initiate the measurement. For frequency measurements, the meter uses only one "range" for all inputs between 3Hz and 300kHz. With no input signal applied, frequency measurements return "0."

CONFigure:PERiod {<range>|MIN|MAX|DEF},{<resolution>|MIN|MAX|DEF}

Preset and configure a period measurement with the specified range and resolution. This command does not initiate the measurement. For period measurements, the meter uses only one "range" for all inputs between 0.33sec and 3.3µsec. With no input signal applied, period measurements return "0."

CONFigure:CONTinuity

Preset and configure for a continuity measurement. This command does not initiate the measurement. The range and resolution are fixed at 1kΩ and 5 1/2 digits respectively.

CONFigure:DIODe

Preset and configure for a diode measurement. This command does not initiate the measurement. The range and resolution are fixed at 1VDC with 1mA current source and 5 1/2 digits respectively.

CONFigure:TEMPerature

Preset and configure for an RTD measurement. This command does not initiate the measurement. The resolution is fixed at 6 1/2 digits.

CONFigure?

Query a recent condition of a function and return a quoted string.

The measurement configuration command

[SENSe:]FUNCtion "<function>"

Select a measurement function and enclose it in quotes in the command string (FUNC "VOLT:DC"). Use one of the following strings:

`VOLTage:DC`

`VOLTage:AC`

`VOLTage:DC:RATio`

`CURRent:DC`

`CURRent:AC`

`RESistance` (for 2-wire ohms)

`FRESistance` (for 4-wire ohms)

`FREQuency`

`PERiod`

`CONTinuity`

`DIODe`

`TEMPerature`

[SENSe:]FUNCtion?

Query the measurement function and return a quoted string.

[SENSe:]<function>:RANGe {<range>|MINimum|MAXimum}

Select a range for the selected function. For frequency and period measurements, range applies to the signal's input voltage, not its frequency (use **FREQuency**:**VOLTage** or **PERiod**:**VOLTage**). **MIN** selects the lowest range for the selected function. **MAX** selects the highest range.

[SENSe:]<function>:RANGe? [MINimum|MAXimum]

Query the range for the selected function. For frequency and period, use **FREQuency**:**VOLTage** or **PERiod:VOLTage**. Autorange thresholds: Down range at <10% of range; Up range at >120% of range.

[SENSe:]<function>:RANGe:AUTO {OFF|ON}

Disable or enable autorange for the selected function.

[SENSe:]<function>:RANGe:AUTO?

Query the autorange setting. Return "1" (ON) or "0" (OFF).

[SENSe:]<function>:RESolution {<resolution>|MINimum|MAXimum}

Set resolution for the selected function (not valid for frequency, period, or ratio). Specify the resolution in the same units as the measurement function, not in number of digits. **MIN** selects the smallest value accepted, which gives the most resolution. **MAX** selects the largest value accepted, which gives the least resolution.

[SENSe:]<function>:RESolution? [MINimum|MAXimum]

Query the resolution for the selected function.

[SENSe:]UNIT {Cel|Far|K}

Select units for temperature measurement. Cel means Celsius, Far means Fahrenheit, and K means Kelvin.

[SENSe:]UNIT?

Query units for temperature measurement.

[SENSe:]TEMPerature:RTD:TYPE{PT100|D100|F100|PT385|PT3916|USER|SPRTD}

Select the RTD type for temperature measurement with RTD.

[SENSe:]TEMPerature:RTD:TYPE?

Query the RTD type for temperature measurement with RTD.

[SENSe:]TEMPerature:RTD:RZERo {<value>|MINimum|MAXimum}

Set the R-Zero constant for the user-defined RTD type.

[SENSe:]TEMPerature:RTD:RZERo? [MINimum|MAXimum]

Query the R-Zero constant for the user-defined RTD type.

[SENSe:]TEMPerature:RTD:ALPHa {<value>|MINimum|MAXimum}

Set the alpha constant for the user-defined RTD type.

[SENSe:]TEMPerature:RTD:ALPHa? [MINimum|MAXimum]

Query the alpha constant for the user-defined RTD type.

[SENSe:]TEMPerature:RTD:BETA {<value>|MINimum|MAXimum}

Set the beta constant for the user-defined RTD type.

[SENSe:]TEMPerature:RTD:BETA? [MINimum|MAXimum]

Query the beta constant for the user-defined RTD type.

[SENSe:]TEMPerature:RTD:DELTa {<value>|MINimum|MAXimum}

Set the delta constant for the user-defined RTD type.

[SENSe:]TEMPerature:RTD:DELTa? [MINimum|MAXimum]

Query the delta constant for the user-defined RTD type.

[SENSe:]TEMPerature:SPRTD:RZERo {<value>|MINimum|MAXimum}

Set the sensor R value at 0 degrees Celsius.

[SENSe:]TEMPerature:SPRTD:RZERo? [MINimum|MAXimum]

Query the sensor R value at 0 degrees Celsius.

[SENSe:]TEMPerature:SPRTD:A4 {<value>|MINimum|MAXimum}

Set the A4 coefficient.

[SENSe:]TEMPerature:SPRTD:A4? [MINimum|MAXimum]

Query the A4 coefficient.

[SENSe:]TEMPerature:SPRTD:B4 {<value>|MINimum|MAXimum}

Set the B4 coefficient.

[SENSe:]TEMPerature:SPRTD:B4? [MINimum|MAXimum]

Query the B4 coefficient.

[SENSe:]TEMPerature:SPRTD:AX {<value>|MINimum|MAXimum}

Set the A coefficient.

[SENSe:]TEMPerature:SPRTD:AX? [MINimum|MAXimum]

Query the A coefficient.

[SENSe:]TEMPerature:SPRTD:BX {<value>|MINimum|MAXimum}

Set the B coefficient.

[SENSe:]TEMPerature:SPRTD:BX? [MINimum|MAXimum]

Query the B coefficient.

[SENSe:]TEMPerature:SPRTD:CX {<value>|MINimum|MAXimum}

Set the C coefficient.

[SENSe:]TEMPerature:SPRTD:CX? [MINimum|MAXimum]

Query the C coefficient.

[SENSe:]TEMPerature:SPRTD:DX {<value>|MINimum|MAXimum}

Set the D coefficient.

[SENSe:]TEMPerature:SPRTD:DX? [MINimum|MAXimum]

Query the D coefficient.

[SENSe:]<function>:NPLCycles {0.02|0. 1|1|10|MINimum|MAXimum}

Set the integration time in number of power line cycles for the selected function. This command is valid only for DCV, DCI, 2-wire ohms, and 4-wire ohms.

[SENSe:]<function>:NPLCycles? [MINimum|MAXimum]

Query the integration time for the selected function.

[SENSe:]FREQuency:APERture {0.01|0.1|1|MINimum|MAXimum}

Set the gate time (or aperture time) for frequency function. Specify 10ms (4 1/2 digits), 100ms (default; 5 1/2 digits), or 1 second (6 1/2 digits).

[SENSe:]FREQuency:APERture? [MINimum|MAXimum]

Query the gate time (or aperture time) for frequency function.

[SENSe:]PERiod:APERture{0.01|0.1|1|MINimum|MAXimum}

Set the gate time (or aperture time) for period function. Specify 10ms (4 1/2 digits), 100ms (default; 5 1/2 digits), or 1 second (6 1/2 digits).

[SENSe:]PERiod:APERture? [MINimum|MAXimum]

Query the gate time (or aperture time) for period function.

[SENSe:]DETector:BANDwidth {3|20|200|MINimum|MAXimum}

Specify the lowest frequency expected in the input signal. The meter selects the slow, medium, or fast AC filter based on the frequency you specify.

[SENSe:]DETector:BANDwidth? [MINimum|MAXimum]

Query the AC filter and return the bandwidth.

[SENSe:]ZERO:AUTO {OFF|ONCE|ON}

Disable or enable the **AUTO ZERO** mode. The **OFF** and **ONCE** modes have a similar effect. **OFF** mode does not issue a new offset measurement until the multimeter goes to the "WAIT-FOR-TRIGGER" state. Parameter **ONCE** issues an immediate offset measurement.

[SENSe:]ZERO:AUTO?

Query the **AUTO ZERO** mode. Returns "1" (ON) or "0" (**OFF** or **ONCE**).

[SENSe:]GAIN:AUTO {OFF|ONCE|ON}

Disable or enable the **AUTO GAIN** mode. The **OFF** and **ONCE** have a similar effect. **OFF** mode does not issue a new offset measurement until the multimeter goes to the "WAIT-FOR-TRIGGER" state. Parameter **ONCE** issues an immediate offset measurement.

[SENSe:]GAIN:AUTO?

Query the **AUTO GAIN** mode. Returns "1" (ON) or "0" (**OFF** or **ONCE**).

INPut:IMPedance:AUTO{OFF|ON}

Disable or enable the automatic input resistance mode for DC voltage measurements. With **AUTO ON**, the input resistance is set to >10GΩ for the 100mV, 1V, and 10V ranges. With **AUTO OFF**, the input resistance is fixed at 10MΩ for all ranges.

INPut:IMPedance:AUTO?

Query the input resistance mode. Returns "1" (ON) or "0" (OFF).

ROUTe:TERMinals?

Query the multimeter to determine if the front or rear input terminals are selected. Returns "FRON" or "REAR."

The math operation command

CALCulate:FUNCtion {PERCent|AVERage|NULL|LIMit|MXB|DB|DBM}

Select the math function (only one function can be enabled at a time. The default function is **PERCent**).

CALCulate:FUNCtion?

Query the present math function. Returns **PERC**, **AVER**, **NULL**, **LIM**, **MXB**, **DB** or **DBM**.

CALCulate:STATe {OFF|ON}

Disable or enable the selected math function.

CALCulate:STATe?

Query the state of the math function. Returns "0" (OFF) or "1" (ON).

CALCulate:PERCent:TARGet {<value>|MINimum|MAXimum}

Set the target value for percent math function. The multimeter clears the value when Min/Max is turned on, when the power has been off or a remote interface reset.

CALCulate:PERCent:TARGet? [MINimum|MAXimum]

Query the target value for the **PERCent** math function.

CALCulate:AVERage:MINimum?

Read the minimum value found during the **Min/Max** operation. The multimeter clears the value when **Min/Max** is turned on, when the power has been turned-off, or a remote interface has been reset.

CALCulate:AVERage:MAXimum?

Read the maximum value found during the **Min/Max** operation. The multimeter clears the value when M**in/Max** is turned on, when the power has been turned-off, or a remote interface has reset.

CALCulate:AVERage:AVERage?

Read the average value of all readings taken since the **Min/Max** operation was enabled. The multimeter clears the value when **Min/Max** is turned on, when the power has been turned-off or a remote interface has been reset.

CALCulate:AVERage:COUNt?

Read the number of readings taken since **Min/Max** was enabled. The multimeter clears the value when **Min/Max** is turned on, when the power has been turned-off ,or a remote interface has been reset.

CALCulate:NULL:OFFSet {<value>|MINimum|MAXimum}

Store a null value in the multimeter's null register. You must turn on the math operation before writing to the math register. You can set the null value to any number between 0 and 120% of the highest range.

CALCulate:NULL:OFFSet?

Query the null value.

CALCulate:LIMit:LOWer {<value>|MINimum|MAXimum}

Set the lower limit for limit testing. You can set the value to any number from 0 to 120% of the highest range for the present function.

CALCulate:LIMit:LOWer?

Query the lower limit for the limit testing.

CALCulate:LIMit:UPPer {<value>|MINimum|MAXimum}

Set the upper limit for limit testing. You can set the value to any number from 0 to 120% of the highest range, for the present function.

CALCulate:LIMit:UPPer?

Query the upper limit for the limit testing.

CALCulate:MXB:MMFactor {<value>|MINimum|MAXimum}

Set the value of M.

CALCulate:MXB:MMFactor? [MINimum|MAXimum]

Query the value of M.

CALCulate:MXB:MBFactor {<value>|MINimum|MAXimum}

Set the value of B.

CALCulate:MXB:MBFactor? [MINimum|MAXimum]

Query the value of B.

CALCulate:DB:REFerence {<value>|MINimum|MAXimum}

Store a relative value in the dB Relative Register. You must turn on the math operation before writing to the math register. You can set the relative value to any number between 0dBm and 200dBm.

CALCulate:DB:REFerence? [MINimum|MAXimum]

Query the dB relative value.

CALCulate:DBM:REFerence {<value>|MINimum|MAXimum}

Set the dBm reference value. Choose from: 50 ~ 8000 ohms.

CALCulate:DBM:REFerence? [MINimum|MAXimium]

Query the dBm reference value.

DATA:FEED RDG_STORE,{"CALCulate"|""}

Selects whether readings taken using the **INITiate** command are stored in the multimeter's internal memory (default) or not stored at all. In the default state (**DATA:FEED RDG_STORE,"CALC"**), up to 2000 readings are stored in memory when **INITiate** is executed. The **MEASure?** And **CONFigure** commands automatically select "CALC." With memory disabled (**DATA:FEED RDG_STORE,""**), readings taken using **INITiate** are not stored. This may be useful with the **Min/Max** operation since it allows you to determine an average of the readings without storing the individual values. An error will be generated if you attempt to transfer readings to the output buffer using the **FETCh?** command.

DATA:FEED?

Query the reading memory state. Returns "CALC" or "".

The triggering commands

INITiate

Change the state of the triggering system from the "idle" state to "wait-for-trigger" state. The meter will start to make measurements when a required triggering condition is met after the **INITiate** command is received. Readings are stored in memory until you are ready to read them. Use the FETCh? command to retrieve your measurements results.

READ?

Change the state of the triggering system from the "idle" state to the "wait-for-trigger" state. The meter will start to make measurements when a required triggering condition is met after the **READ?** command is received. Readings are sent to the output buffer immediately.

TRIGger:SOURce {BUS|IMMediate|EXTernal}

Select a trigger source. The multimeter will accept a software (BUS) trigger, an immediate internal trigger, or a hardware trigger from the rear-panel EXT TRIG terminal.

TRIGger:SOURce?

Query the trigger source.

TRIGger:DELay {<seconds>|MINimum|MAXimum}

Set a trigger delay time in seconds. The delay is the time between the trigger signal and each sample that follows. Specify a delay time from 0 to 3,600 seconds.

TRIGger:DELay?

Query the trigger delay time.

TRIGger:DELay:AUTO {OFF|ON}

Disable or enable an automatic trigger delay. The delay is determined by function, range, integration time, and AC filter settings. Specifying a delay time automatically turns off the automatic trigger delay.

TRIGger:DELay:AUTO?

Query the automatic trigger delay mode. Returns "0" (OFF) or "1" (ON).

SAMPle:COUNt {<value>|MINimum|MAXimum}

Set the number of readings (samples) the multimeter takes per trigger. Select a number from 1 to 50,000 readings per trigger.

SAMPle:COUNt ? [MINimum|MAXimum]

Query the sample count.

TRIGger:COUNt {<value>|MINimum|MAXimum|INFinite}

Specify the number of triggers the multimeter will accept before returning to the "idle" state. Select from 1 to 50,000 triggers. The **INFinite** parameter instructs the multimeter to take triggers continuously. Trigger count is ignored while in local operation.

TRIGger:COUNt? [MINimum|MAXimum|INFinite]

Query the trigger count. Returns "9.90000000E+37" when you select the infinite trigger count.

The system-related commands

FETCh?

Transfer readings stored in memory by the **INITiate** command to output buffer, where you are able to read them into your bus controller.

READ?

Change the state of the triggering system from the "idle" state to the "wait-for-trigger" state. The meter will start to make measurements when a required triggering condition is met after the **READ?** command is received. Measurement readings are sent to the output buffer immediately.

DISPlay {OFF|ON}

Turn off or on the display.

DISPlay?

Query the display setting. Returns "0" (OFF) or "1" (ON).

DISPlay:TEXT <quoted string>

Show a message on the front panel display. The allowed message can be up to 16 characters in the lower row display; any additional characters will be truncated.

DISPlay:TEXT?

Query the message sent to the front panel display.

DISPlay:TEXT:CLEar

Clear the message shown on the front panel display.

SYSTem:BEEPer

Issue a single beeping tone.

SYSTem:BE80

Query the beeper mode. Returns "0" (OFF) or "1" (ON).

SYSTem:ERRor?

Query the multimeter's error queue. Up to 20 errors can be stored in the queue. Errors are retrieved in first-in-first-out (FIFO) order. Each error string may contain up to 80 characters.

SYSTem:VERSion?

Query the present SCPI version.

DATA:POINts?

Query the number of readings stored in the multimeter's internal memory.

***RST**

Reset the multimeter to the power-on configuration. This command can not clear the error queue.

***IDN?**

Read the multimeter's identification string (dimension a string variable with at least 35 characters).

Other interface commands

SYSTem:LOCal

Place the multimeter in the **LOCal** mode. All keys on the front panel are fully functional in this mode.

SYSTem:REMote

Place the multimeter in the remote mode. All buttons on the front panel, except the **LOCAL** key, are disabled.

Status reporting commands

SYSTem:ERRor?

Query the multimeter's error queue. A maximum of 20 errors can be stored in the queue. Errors are retrieved in first-in-first out (FIFO) order. Each error string may contain a maximum of 80 characters.

STATus:QUEStionable:ENABle <enable value>

Enable bits in the questionable data enable register. The selected bits are then reported to the Status Byte.

STATus:QUEStionable:ENABle?

Query the questionable data enable register. The multimeter returns a binary-weighted decimal representing the bits set in the enable register.

STATus:QUEStionable:EVENt?

Query the questionable data event register. The multimeter returns a decimal value that corresponds to the binary-weighted sum of all bits set in the register.

STATus:PRESet

Clear all bits in the questionable data enable register.

***CLS**

Clear the status byte summary register and all event registers.

***ESE <enable value>**

Enable bits in the standard event enable register. The selected bits are then reported to the status byte.

***ESE?**

Query the standard event enable register. The multimeter returns a decimal value that corresponds to the binary-weighted sum of all bits set in the register.

***ESR?**

Query the standard event register. The multimeter returns a decimal value that corresponds to the binary-weighted sum of all bits set in the register.

***OPC**

Sets the "operation complete" bit (bit 0) in the standard event register after the command is executed.

***OPC?**

Returns "1" to the output buffer after the command is executed.

***PSC {0|1}**

Power-on status clear. Clear the status byte and standard event register enable masks when power is turned on (***PSC 1**). When ***PSC 0** is in effect, the status byte and standard event register enable masks

are not cleared when power is turned on (they are stored in non-volatile memory).

***PSC?**

Query the power-on status clear setting. Returns "0" (***PSC 0)** or "1" (***PSC 1**).

***SRE <enable value>**

Enable bits in the status byte enable register.

***SRE?**

Query the status byte enable register. The multimeter returns a decimal value which corresponds to the binary-weighted sum of all bits set in the register.

***STB?**

Query the status byte summary register. The ***STB?** command is similar to a serial poll, but it is processed like any other instrument command. The ***STB?** command returns the same result as a serial poll, but the "request service" bit (bit 6) is not cleared if a serial poll has occurred.

Model 2100-specific SCPI compliance information

This section describes a list of commands that are device-specific to the Model 2100 Digital Multimeter. Although not included in the 1999.0 version of the SCPI standard, these commands are designed with the SCPI format in mind and they follow all of the syntax rules of the standard.

Many of the required SCPI commands are accepted by the multimeter but are not described in this manual for simplicity or clarity. Most of these non-documented commands duplicate the functionality of a command already described in this section.

MEASure:

```
CONTinuity?
DIODe?
```

SAMPle:

```
COUNt {<value>|MINimum|MAXimum}
COUNt? [MINimum|MAXimum]
```

[SENSe:]

```
FUNCtion "CONTinuity"
FUNCtion "DIODe"
FREQuency:VOLTage:RANGe {<range>|MINimum|MAXimum}
FREQuency:VOLTage:RANGe? [MINimum|MAXimum]
FREQuency:VOLTage:RANGe:AUTO {OFF|ON}
FREQuency:VOLTage:RANGe:AUTO?
PERiod:VOLTage:RANGe {<range>|MINimum|MAXimum}
PERiod:VOLTage:RANGe? [MINimum|MAXimum]
PERiod:VOLTage:RANGe:AUTO {OFF|ON}
PERiod:VOLTage:RANGe:AUTO?
ZERO:AUTO?
```

CALCulate:

```
PERCent:TARGet {<value>|MINimum|MAXimum}
PERCent:TARGet? [MINimum|MAXimum]
AVERage:MINimum?
AVERage:MAXimum?
AVERage:AVERage?
AVERage:COUNt?
NULL:OFFSet {<value>|MINimum|MAXimum}
NULL:OFFSet? [MINimum|MAXimum]
LIMit:LOWer {<value>|MINimum|MAXimum}
LIMit:LOWer? [MINimum|MAXimum]
LIMit:UPPer {<value>|MINimum|MAXimum}
LIMit:UPPer? [MINimum|MAXimum]
MXB:MMFactor {<value>|MINimum|MAXimum}
MXB:MMFactor? [MINimum|MAXimum]
MXB:MBFactor {<value>|MINimum|MAXimum}
MXB:MBFactor? [MINimum|MAXimum]
DB:REFerence {<value>|MINimum|MAXimum}
DB:REFerence? [MINimum|MAXimum]
DBM:REFerence {<value>|MINimum|MAXimum}
DBM:REFerence? [MINimum|MAXimum]
```

CONFigure:

```
CONTinuity
DIODe
```

INPut:

```
IMPedance:AUTO {OFF|ON}
IMPedance:AUTO?
```

IEEE-488 compliance information

IEEE-488.2 common commands

```
*CLS
*ESE <enable value>
*ESE?
*ESR?
*IDN?
*OPC
*OPC?
*PSC {0|1}
*PSC?
*RST
*SRE <enable value>
*SRE?
*STB?
*TRG
```

About application programs

This section provides a brief description for each Model 2100 sample program.

NOTE *These examples are also available for download on www.keithley.com.*

Visual Basic 6

Learn how to create and use Keithley Instruments, Inc. **IOUtils** components, controls, data access, and more with the following Visual Basic 6 sample applications.

Visual C++

In an MFC (Microsoft Foundation Class) application, you can override Keithley Instruments, Inc. **IOUtils** interfaces in a class as well as provide additional interfaces. The example in this section illustrates how to override an interface in a class while preserving the original interface implementation so that it can be delegated to by the new interface implementation. Browse the Visual C++ samples code; see Visual C++ DEVQUERY sample application.

Visual Basic 6 programming example 1: MEASure.bas

Visual Basic 6 sample applications using MEASure? for a single measurement

The following example uses the **MEASure?** command to make a single ac current measurement. This is the easiest way to program the multimeter for measurements. However, MEASure? does not offer much flexibility.

Creating the application

To create a new Visual Basic 6 project:

1. Create a new Standard.EXE project.
2. From the main menu, select **Project**, then select **Project 1 Properties** and press the **OK** button.
3. Set the startup object for a Windows application to **Sub Main** and press the **OK** button.

4. From the main menu, select **Project**, then select **Add Module** and press the **Open** button.
5. Cut and paste the code below into module 1.
6. From the main menu, select **Project**, then select **References**.
7. Select **Browse...** and navigate to the C:\Windows\System32 directory.
8. Select the file, **visa32.dll**, and click the **Open** button (this will add a reference to the "VISA Library").
9. Save your project.

The Sub Main function is where you need to add initialization code.

```
 Sub Main()

  Rem ##########################################
  Rem
  Rem    Using NI-VISA library visa32.dll
  Rem
  Rem    Set device on the VOLTage:DC configure and
  Rem    read the measure
  Rem
  Rem ##########################################

  Dim stat  As ViStatus
  Dim dfltRM As ViSession
  Dim sesn As ViSession
  Dim fList As ViFindList
  Dim desc As String * VI_FIND_BUFLEN
  Dim nList As Long
  Dim ret As Long
  Dim readin As String * 64

  stat = viOpenDefaultRM(dfltRM)
  If (stat < VI_SUCCESS) Then
    'Rem Error initializing VISA ... exiting
    MsgBox "USBTMC resource not found.", vbExclamation, "2100 multimeter device
test"
    Exit Sub
  End If

  Rem Find all 2100 USBTMC instruments in the system
  stat = viFindRsrc(dfltRM, "USB[0-9]*::0x05E6::0x2100::?*INSTR", fList, nList,
desc)
  If (stat < VI_SUCCESS) Then
    'Rem Error finding resources ... exiting
    MsgBox "2100 device not found.", vbExclamation, "2100 multimeter device test"
    viClose (dfltRM)
    Exit Sub
  End If

  Rem Open a session to each and determine if it matches
  stat = viOpen(dfltRM, desc, VI_NULL, VI_NULL, sesn)
  If (stat < VI_SUCCESS) Then
      MsgBox "Open device failed.", vbExclamation, "2100 multimeter device test"
      stat = viClose(fList)
      Exit Sub
  End If
  Rem send reset command '*RST' -- reset 2100
  stat = viWrite(sesn, "*RST", 4, ret)
  If (stat < VI_SUCCESS) Then
```

```
    MsgBox "System command error. (*RST)", vbExclamation, "2100 multimeter device
test"
     stat = viClose(fList)
     Exit Sub
  End If
  Rem send Clear command '*CLS'-- Clear 2100 status register
  stat = viWrite(sesn, "*CLS", 4, ret)
  If (stat < VI_SUCCESS) Then
    MsgBox "System command error. (*CLS)", vbExclamation, "2100 multimeter device
test"
     stat = viClose(fList)
     Exit Sub
  End If

  Rem send measure command -- Set to 0.1 volt dc range
  stat = viWrite(sesn, "meas:volt:DC? 0.1,0.01", 22, ret)
  If (stat < VI_SUCCESS) Then
     MsgBox "System command error. (meas:volt:dc? ...)", vbExclamation, "2100
multimeter device test"
     stat = viClose(fList)
     Exit Sub
  End If

  Rem fetch the measure data
  stat = viRead(sesn, readin, 64, ret)
  If (stat < VI_SUCCESS) Then
     MsgBox "Read in data error.", vbExclamation, "2100 multimeter device test"
     stat = viClose(fList)
     Exit Sub
  End If

  Debug.Print "Rdg = "; readin

  Rem set to local mode
  stat = viWrite(sesn, "system:local", 12, ret)
  If (stat < VI_SUCCESS) Then
     MsgBox "System command error. (system:local)", vbExclamation, "2100
multimeter device test"
     stat = viClose(fList)
     Exit Sub
  End If

  stat = viClose(sesn)
  stat = viClose(fList)
  stat = viClose(dfltRM)

  MsgBox "End of Job."

End Sub
```

Using CONFigure with a math operation

The following example uses **CONFigure** with the **dBm** math operation. The **CONFigure** command gives you a little more programming flexibility than the **MEASure?** command. This allows you to incrementally change the multimeter's configuration. The following example is shown in Visual Basic.

Visual Basic programming example 2: CONFigure

The CONFigure function.

```
Public Declare Sub Sleep Lib "kernel32" (ByVal dwMilliseconds As Long)

Sub main()

  Rem ########################################
  Rem
  Rem    Using NI-VISA library visa32.dll
  Rem
  Rem    Set sample count 5 configuration and
  Rem    read the trigger
  Rem
  Rem ########################################

  Dim stat  As ViStatus
  Dim dfltRM As ViSession
  Dim sesn As ViSession
  Dim fList As ViFindList
  Dim desc As String * VI_FIND_BUFLEN
  Dim nList As Long
  Dim ret As Long
  Dim readin As String * 128
  Dim i As Integer      ' Array index

  stat = viOpenDefaultRM(dfltRM)
  If (stat < VI_SUCCESS) Then
    'Rem Error initializing VISA ... exiting
    MsgBox "USBTMC resource not found.", vbExclamation, "2100 multimeter device
test"
    Exit Sub
  End If

  Rem Find all 2100 USBTMC instruments in the system
  stat = viFindRsrc(dfltRM, "USB[0-9]*::0x05E6::0x2100::?*INSTR", fList, nList,
desc)
  If (stat < VI_SUCCESS) Then
    'Rem Error finding resources ... exiting
    MsgBox "2100 device not found.", vbExclamation, "2100 multimeter device test"
    viClose (dfltRM)
    Exit Sub
  End If

  Rem Open a session to each and determine if it matches
  stat = viOpen(dfltRM, desc, VI_NULL, VI_NULL, sesn)
  If (stat < VI_SUCCESS) Then
      MsgBox "Open device failed.", vbExclamation, "2100 multimeter device test"
      stat = viClose(fList)
```

```
      Exit Sub
  End If

  Rem send reset command '*RST' -- reset 2100
  stat = viWrite(sesn, "*RST", 4, ret)
  If (stat < VI_SUCCESS) Then
   MsgBox "System command error. (*RST)", vbExclamation, "2100 multimeter device
test"
    stat = viClose(fList)
    Exit Sub
  End If
  Rem send Clear command '*CLS'-- Clear 2100 status register
  stat = viWrite(sesn, "*CLS", 4, ret)
  If (stat < VI_SUCCESS) Then
   MsgBox "System command error. (*CLS)", vbExclamation, "2100 multimeter device
test"
    stat = viClose(fList)
    Exit Sub
  End If

  Rem send command -- 50 ohm reference resistance
  stat = viWrite(sesn, "CALC:DBM:REF 50", 15, ret)
  If (stat < VI_SUCCESS) Then
    MsgBox "System command error.", vbExclamation, "2100 multimeter device test"
    stat = viClose(fList)
    Exit Sub
  End If
  Rem send command -- Set k2100 to 1 amp ac range
  stat = viWrite(sesn, "CONF:VOLT:AC 1,0.001", 20, ret)
  If (stat < VI_SUCCESS) Then
    MsgBox "System command error.", vbExclamation, "2100 multimeter device test"
    stat = viClose(fList)
    Exit Sub
  End If
  Rem send command -- Select 200 Hz (fast) ac filter
  stat = viWrite(sesn, "DET:BAND 200", 12, ret)
  If (stat < VI_SUCCESS) Then
    MsgBox "System command error.", vbExclamation, "2100 multimeter device test"
    stat = viClose(fList)
    Exit Sub
  End If
  Rem send command -- k2100 will accept 5 triggers
  stat = viWrite(sesn, "SAMP:COUN 5", 11, ret)
  If (stat < VI_SUCCESS) Then
    MsgBox "System command error.", vbExclamation, "2100 multimeter device test"
    stat = viClose(fList)
    Exit Sub
  End If
  Rem send command -- Trigger source is IMMediate
  stat = viWrite(sesn, "TRIG:SOUR IMM", 13, ret)
  If (stat < VI_SUCCESS) Then
    MsgBox "System command error.", vbExclamation, "2100 multimeter device test"
    stat = viClose(fList)
    Exit Sub
  End If
  Rem send command -- Select dBm function
  stat = viWrite(sesn, "CALC:FUNC DBM", 13, ret)
  If (stat < VI_SUCCESS) Then
    MsgBox "System command error.", vbExclamation, "2100 multimeter device test"
    stat = viClose(fList)
```

```
    Exit Sub
  End If

  Rem send command -- Enable math
  stat = viWrite(sesn, "CALC:STAT ON", 12, ret)
  If (stat < VI_SUCCESS) Then
    MsgBox "System command error.", vbExclamation, "2100 multimeter device test"
    stat = viClose(fList)
    Exit Sub
  End If

  Rem send command -- Take readings
  stat = viWrite(sesn, "READ?" & vbLf, 6, ret)
  If (stat < VI_SUCCESS) Then
    MsgBox "System command error.", vbExclamation, "2100 multimeter device test"
    stat = viClose(fList)
    Exit Sub
  End If

  Sleep (3000)  ' wait for math processing

  Rem fetch the measure data
  stat = viRead(sesn, readin, 128, ret)
  If (stat < VI_SUCCESS) Then
    MsgBox "Read in data error.", vbExclamation, "2100 multimeter device test"
    stat = viClose(fList)
    Exit Sub
  End If

  Rem set to local mode
  stat = viWrite(sesn, "system:local", 12, ret)
  If (stat < VI_SUCCESS) Then
    MsgBox "System command error. (system:local)", vbExclamation, "2100
multimeter device test"
    stat = viClose(fList)
    Exit Sub
  End If

  stat = viClose(sesn)
  stat = viClose(fList)
  stat = viClose(dfltRM)

  For i = 0 To (5 - 1) ' print out the 4 times samples reading
    Debug.Print "Rdgs = "; Mid(readin, i * 16 + 1, 15)
  Next

  MsgBox "End of Job."

End Sub
```

Visual C++ programming example: DEVQUERY

Visual C++ sample application

Using DEVQUERY

This C++ sample application is a Win32 console application. It illustrates how to use the Keithley Instruments, Inc. **IOUtils** command. A Win32 console application is a Win32 application that uses text-based input and output, not a graphical interface. You can quickly create a Win32 application by using simple input and output functions.

NOTE *This example depends on the presence of VISA include files. These files are available by downloading this example from www.keithley.com or by installing the full development version of VISA.*

The DEVQUERY function.

```
// devquery.cpp : Defines the entry point for the console application.
//
//  Call the NI-VISA library visa32.dll
//
//

#include "stdafx.h"
#include "visa.h"

//standard include for a Microsoft Visual C++ project
#include "stdio.h"
#include "windows.h"

void main(int argc, char* argv[])
{
   // TODO: Add your control notification handler code here

   HINSTANCE hUSBTMCLIB;             // for USBTMC HANDLE
   unsigned long m_defaultRM_usbtmc, m_instr_usbtmc;
unsigned long m_findList_usbtmc;
   unsigned long m_nCount;
   ViStatus  status;
   int       m_Timeout = 7000;
   char      *pStrout;               // Write out data buffer
   BYTE      pStrin[64];             // Read in data buffer
   int       len;
   ULONG     nWritten;
   ULONG     nRead = 0;
   char      buffer[256];
   char      instrDescriptor[256];

   // Load the NI-VISA library for USBTMC device
   hUSBTMCLIB = LoadLibrary ("visa32.dll");

   if (!hUSBTMCLIB)
   {
   MessageBox(NULL, "NIVISA for USBTMC library not found.", "2100 multimeter
device test", MB_OK);
   return;
   }

   // Link the libraries
   signed long (__stdcall  *PviOpenDefaultRM_usb)(unsigned long *vi);
   signed long (__stdcall  *PviFindRsrc_usb)(unsigned long sesn, char *expr,
unsigned long *vi, unsigned long *retCnt, char far desc[]);
   signed long (__stdcall  *PviOpen_usb)(unsigned long sesn, char *name,
unsigned long mode, unsigned long timeout, unsigned long *vi);
   signed long (__stdcall  *PviClose_usb)(unsigned long vi);
```

```
   signed long (__stdcall  *PviWrite_usb)(unsigned long vi, unsigned char *name,
unsigned long len, unsigned long *retval);
   signed long (__stdcall  *PviRead_usb)(unsigned long vi, unsigned char *name,
unsigned long len, unsigned long *retval);
   signed long (__stdcall  *PviSetAttribute_usb)(unsigned long vi, unsigned long
viAttr, unsigned long attrstat);


   PviOpenDefaultRM_usb  = (signed long (__stdcall*)(unsigned
long*))GetProcAddress(hUSBTMCLIB, (LPCSTR)"viOpenDefaultRM");
   PviFindRsrc_usb       = (signed long (__stdcall*)(unsigned long, char*,
unsigned long*, unsigned long*, char[]))GetProcAddress(hUSBTMCLIB,
(LPCSTR)"viFindRsrc");  = (signed long (__stdcall*)(unsigned
long))GetProcAddress(hUSBTMCLIB, (LPCSTR)"viClose");
   PviOpen_usb          = (signed long (__stdcall*)(unsigned long, char*,
unsigned long, unsigned long, unsigned long*))GetProcAddress(hUSBTMCLIB,
(LPCSTR)"viOpen");
    PviWrite_usb         = (signed long (__stdcall*)(unsigned long, unsigned
char*, unsigned long, unsigned long*))GetProcAddress(hUSBTMCLIB,
(LPCSTR)"viWrite");
    PviRead_usb          = (signed long (__stdcall*)(unsigned long, unsigned
char*, unsigned long, unsigned long*))GetProcAddress(hUSBTMCLIB,
(LPCSTR)"viRead");
    PviSetAttribute_usb  = (signed long (__stdcall*)(unsigned long, unsigned
long, unsigned long))GetProcAddress(hUSBTMCLIB, (LPCSTR)"viSetAttribute");

    if (PviOpenDefaultRM_usb == NULL ||
        PviFindRsrc_usb            == NULL ||
        PviClose_usb               == NULL ||
        PviOpen_usb                == NULL ||
        PviWrite_usb               == NULL ||
        PviRead_usb                == NULL ||
        PviSetAttribute_usb        == NULL
                                  )
   {
   FreeLibrary (hUSBTMCLIB);
   hUSBTMCLIB = NULL;
   MessageBox(NULL, "NIVISA for USBTMC library not ready.", "2100 multimeter
device test", MB_OK);
   return;
   }

   printf("\n ###### Start C++ Example program. ######\n");
   printf(" We check the 2100 multimeter on USB port and\n");
   printf(" identify the first connected 2100 device.\n\n");

   // Open Device -- Resource Manager
   status = PviOpenDefaultRM_usb(&m_defaultRM_usbtmc);
   if (status < 0L)
   {
   PviClose_usb(m_defaultRM_usbtmc);
   hUSBTMCLIB = NULL;
   m_defaultRM_usbtmc = 0;
MessageBox(NULL, "USBTMC resource not found.", "2100 multimeter device test",
MB_OK);
                                  return;
   }
   else
   {
   // Find the USBTMC device USB[0-9]*::0x05E6::0x2100::?*INSTR ( Hex )
```

```
                                status = PviFindRsrc_usb (m_defaultRM_usbtmc,
"USB[0-9]*::0x05E6::0x2100::?*INSTR", &m_findList_usbtmc, &m_nCount,
instrDescriptor);
   if (status < 0L)
   {
   // Find the USBTMC device USB[0-9]*::0x05E6::0x2100::?*INSTR ( Dec )
                                status = PviFindRsrc_usb (m_defaultRM_usbtmc,
"USB[0-9]*::1510::8448::?*INSTR", &m_findList_usbtmc, &m_nCount,
instrDescriptor);
   if (status < 0L)
   {
                                PviClose_usb(m_defaultRM_usbtmc);
                                hUSBTMCLIB = NULL;
                                m_defaultRM_usbtmc = 0;
                                }
                                else
                                {
                                PviOpen_usb(m_defaultRM_usbtmc,
instrDescriptor, 0, 0, &m_instr_usbtmc);
                                status = PviSetAttribute_usb(m_instr_usbtmc,
VI_ATTR_TMO_VALUE, m_Timeout);
                                }
                                }
                                else
                                {
                                PviOpen_usb(m_defaultRM_usbtmc,
instrDescriptor, 0, 0, &m_instr_usbtmc);
                                status = PviSetAttribute_usb(m_instr_usbtmc,
VI_ATTR_TMO_VALUE, m_Timeout);
                                }
   }

   if (!hUSBTMCLIB)
   {
                                printf("2100 device connect failed.\n");
                                return;
   }

   // Write command "*IDN?" and read the 2100 identification string
   len = 64;
   pStrout = new char[len];
   ZeroMemory(pStrout, len);
   strcpy(pStrout, "*idn?");
   status = PviWrite_usb(m_instr_usbtmc, (unsigned char *)pStrout, 6,
&nWritten);
   Sleep(30);
   if (status != VI_SUCCESS)
   {
                                MessageBox(NULL, "Write to device error.",
"2100 multimeter device test", MB_OK);
                                PviClose_usb(m_defaultRM_usbtmc);
                                hUSBTMCLIB = NULL;
                                m_defaultRM_usbtmc = 0;
                                return;
   }
   else
   {
                                printf(" output : *IDN?\n");
   }
   Sleep(1000);
```

```
    // Read data from device
    len = 64;
    if (hUSBTMCLIB)
    {
                                    status = PviRead_usb(m_instr_usbtmc, pStrin,
len, &nRead);
                                    if (nRead > 0)
                                    {
                                    for (len=0; len < (long) nRead; len++)
                                    {
                                    buffer[len] = pStrin[len];
                                    }
                                    }
                                    buffer[nRead] = '\0';
                                    printf(" input : %s\n\n",buffer);
    }

    // Set sample count to 1
    strcpy(pStrout, "SAMP:COUN 1");
    status = PviWrite_usb(m_instr_usbtmc, (unsigned char *)pStrout, 12,
&nWritten);
    Sleep(30);

    // Set configure Voltage AC, range 0.1A
    strcpy(pStrout, "CONF:VOLT:AC 0.1,0.01");
    status = PviWrite_usb(m_instr_usbtmc, (unsigned char *)pStrout, 22,
&nWritten);
    Sleep(3000);

    // Set configure frequency, range Auto
    strcpy(pStrout, "CONF:FREQ");
    status = PviWrite_usb(m_instr_usbtmc, (unsigned char *)pStrout, 10,
&nWritten);
    Sleep(3000);

    // Set configure Current DC, range 0.1A
    strcpy(pStrout, "CONF:CURR:DC 1,0.01");
    status = PviWrite_usb(m_instr_usbtmc, (unsigned char *)pStrout, 20,
&nWritten);
    Sleep(3000);

    // Fetch the 2100 measure value ( screen value )
    // Set Voltage DC measure
    strcpy(pStrout, "CONF:VOLT:DC 0.1,0.1");
    status = PviWrite_usb(m_instr_usbtmc, (unsigned char *)pStrout, 21,
&nWritten);
    Sleep(1000);

    // Send read command
    strcpy(pStrout, "READ?");
    status = PviWrite_usb(m_instr_usbtmc, (unsigned char *)pStrout, 6,
&nWritten);
    Sleep(30);
    printf(" output : READ?\n");

    status = PviRead_usb(m_instr_usbtmc, pStrin, 64, &nRead);
    if (nRead > 0)
    {
                                    for (len=0; len < (long) nRead; len++)
                                    {
```

```
                                    buffer[len] = pStrin[len];
                                    }
    }
    buffer[nRead] = '\0';
    printf(" input : %s\n\n", buffer);

    // Set device to local mode
    strcpy(pStrout, "system:local");
    status = PviWrite_usb(m_instr_usbtmc, (unsigned char *)pStrout, 13,
&nWritten);
    free(pStrout);

    // Close device
    if (!hUSBTMCLIB)
    return;
    m_nCount = 0;
    m_defaultRM_usbtmc = 0;
     FreeLibrary (hUSBTMCLIB);
    hUSBTMCLIB = NULL;

    return;
}
```

Index

Numerics

2-wire 3-4
2-wire, RTD measurements 3-8
3-wire, RTD measurements 3-9
3-wire, RTD temperature 3-9
4-wire 3-4
4-wire, RTD measurements 3-10

A

AC filter, defaults 4-4
AC measurements 3-2
AC, filter 4-4
Accessories 1-5
Accuracy 4-4, 4-6
ADC, set 4-2
Addenda, manual 1-3
Adjusting the handle 2-2
Annunciators, display 2-22, 2-23
Application programs B-24
Application, Visual C++ sample B-29
Auto Gain 4-2
Auto trigger 4-14
Auto Zero 4-2
Automatic trigger delay 4-18
Average, Min/Max 4-22, B-17
Average, moving 4-5
Average, repeating 4-5
Averaging digital filter 4-5

B

Basic measurement functions 3-2
Beeper 4-30
Beeper, defaults 4-31
Boolean parameters B-5

C

Calibration 4-40
Calibration, view information 4-40
Capacity, memory 4-31
Command format B-2
Command syntax B-3
Command terminators, SCPI B-4
Command, CONFigure B-7
Command, math operation 5-7, B-14
Command, MEASure? B-6
Command, measurement configuration .. B-9
Commands, common 5-3
Commands, IEEE-488.2 5-10
Commands, IEEE-488.2 common B-4
Commands, measurement configuration . 5-7
Commands, other interface 5-10, B-20
Commands, remote interface 5-3
Commands, SCPI 5-2, B-2
Commands, status reporting 5-9, B-20
Commands, system-related 5-9, B-18
Commands, triggering 5-8, B-17
Compliance, IEEE-488 ..... B-24
Compliance, SCPI B-22
Configuration, measurement 4-2
Configuration, measurement commands . 5-7
CONFigure command B-7
Connecting, power 2-7
Connection, USB 2-23
Connections 2-23, 3-2
Connector, USB 5-2
Continuity 4-8
Continuity, measure 3-7
Current, measure 3-3

D

Damage, Inspection for 1-4
Data formats, output B-5
dB calculation 4-26
dB measurement 4-27
dB, function 4-26
dBm calculation 4-27
dBm measurement 4-28
dBm, function 4-27
DC input resistance 4-7
DC input resistance defaults 4-8
DC measurements 3-2
Default, factory settings 2-18
Defaults, AC filter 4-4
Defaults, Auto Zero, Auto Gain 4-2
Defaults, beeper 4-31
Defaults, DC input resistance 4-8
Defaults, digital filter 4-5
Defaults, display 4-30
Defaults, range 4-9
Defaults, resolution 4-6
Defaults, sensitivity band 4-33
Defaults, threshold resistance 4-9
Defaults, trigger delay 4-18
Delay time, trigger 4-19
Delay, trigger 4-18
DEVQUERY B-29
Digital filter 4-5
Digital filter, defaults 4-5
Diode, measure 3-7, 3-8
Discrete parameters B-5
Display 2-21, 4-29
Display keys 2-20
Display, annunciators 2-22, 2-23
Display, defaults 4-30

E

Error codes 6-2
Error condition 4-35
Error queue, check 4-36
Errors 6-2
Errors, execution 6-2
Execution errors 6-2

F

Factors, RTD 4-11
Factory default settings 2-18
Feature overview 1-2
Filter 4-4
Filter, AC 4-4
Filter, AC defaults 4-4
Filter, digital 4-5
Firmware revision 4-36
Format, command B-2
Frequency, measure 3-6
Front panel 2-19
Function keys 2-20
Function, dB 4-26
Function, dBm 4-27
Function, limits test 4-24
Function, Min/Max 4-22
Function, MX+B 4-25
Function, percent 4-21
Function, ratio 4-20
Functions, basic measurement 3-2
Fuse 2-21
Fuse devices 2-23
Fuse, changing 2-9
Fuse, power-line 2-9

H

Handle, adjusting 2-2

I

IEEE-488 compliance B-24
IEEE-488.2 commands 5-10
IEEE-488.2 common commands B-4
Initial mode 4-34
Input terminal switch 4-13
Input voltage, maximum 3-7
Inspection for damage 1-4
Instruction manual 1-5
Interface commands 5-10
Interface commands, other B-20
Internal immediate trigger mode 4-15

K

Keys, display 2-20
Keys, function 2-20
Keys, power 2-20
Keys, setup 2-21
KI-TOOL 5-2

L

Language 4-35, B-2
Limits test, function 4-24

M

Maintenance 1-3
Manual addenda 1-3
Manual, Instruction 1-5
Math operation command 5-7, B-14
Math operation, limits test 4-24
Math operations 4-19
Math operations, dB 4-26
Math operations, dBm 4-27
Math operations, Min/Max 4-22
Math operations, MX+B 4-25
Math Operations, percent 4-21
Math operations, ratio 4-20
Measure current 3-3
Measure frequency 3-6
Measure resistance 3-6
Measure temperature 3-9
Measure voltage 3-3
Measure, continuity 3-7
Measure, diode 3-7, 3-8
Measure, period 3-6
Measure, resistance 3-4
MEASure? command B-6
Measurement + configuration command B-9
Measurement configuration 4-2
Measurement, dB 4-27
Measurement, dBm 4-28
Measurement, percent 4-21
Measurement, ratio 4-20
Measurements 4-11
Measurements, AC 3-2
Measurements, DC 3-2
Measurements, RTD 3-8, 3-9, 3-10
Memory capacity 4-31
Memory reading 4-31
Min/Max, function 4-22
Mode, auto triggering 4-14
Mode, internal intermediate trigger 4-15
Mode, single trigger 4-15
Mode, trigger 4-14
Moving average 4-5
MX+B, function 4-25

N

Numeric parameters B-4

O

Operations, math 4-19
Operations, other system-related 4-29
Operations, trigger 4-14
Output data formats B-5

P

Panel, rear 2-23
Parameter types, SCPI B-4
Parameters, Boolean B-5
Parameters, discrete B-5
Parameters, Min/Max B-3
Parameters, numeric B-4
Parameters, query B-3
Parameters, string B-5
Pass/fail 5-2
Percent function 4-21
Percent measurement 4-21

Period, measurement 3-6
Power cord 2-7, 2-9
Power keys 2-20
Power, connecting 2-7
Power-line fuse 2-9
Precautions 1-3
Programming example,
Visual Basic B-24, B-27
Programs, application B-24

Q

Query, parameters B-3

R

Range, defaults 4-9
Range, manual and auto 4-9
Ratio function 4-20
Ratio measurement 4-20
Reading hold 4-17
Reading memory 4-31
Reading memory, using 4-32
Readings, number per trigger 4-16
Readings, recall 4-32
Readings, store 4-32
Rear panel 2-23
Recall readings 4-32
Reference resistance 4-28
Relative reference 4-26
Remote interface B-1
Remote interface commands 5-3
Remote interface operations 5-2
Remote interface, setting up 5-2
Repacking for shipment 1-5
Repair Department 1-5
Repeating average 4-5
Resistance, DC input 4-7
Resistance, measure 3-4, 3-6
Resistance, threshold 4-8
Resolution setting 4-6
Resolution, defaults 4-6
RTD 4-11
RTD measurements 3-8, 3-9
RTD measurements, 2-wire 3-8
RTD measurements, 4-wire 3-10
RTD, set up 4-12

S

Safety 1-4
Samples, number per trigger 4-16
SCPI command format B-2
SCPI command terminators B-4
SCPI commands 5-2, B-2
SCPI compliance B-22
SCPI, parameter types B-4
Sensitivity band (Hold) 4-33
Sensitivity band defaults 4-33
Sensor, selection for temperature 4-11
Service form 1-5
Setting up 2-2
Settings, default factory 2-18
Setup keys 2-21
Shipment contents 1-5
Single trigger mode 4-15
Source, trigger 4-16
Specifications 1-3, A-1
Status reporting commands 5-9, B-20
Store and recall 4-31
Store readings 4-32
String parameters B-5
Switch, input terminal 4-13
Syntax, command B-3
System-related commands 5-9, B-18
System-related operations, other 4-29

T

Temperature, 3-wire RTD 3-9
Temperature, measure 3-9
Temperature, sensor selection 4-11
Terminals 2-21
Threshold resistance 4-8
Threshold resistance defaults 4-9
Trigger delay 4-18
Trigger delay defaults 4-18
Trigger delay time 4-19
Trigger delay, automatic 4-18
Trigger mode 4-14
Trigger operations 4-14
Trigger setting 4-16
Trigger source 4-16
Trigger, auto 4-14
Trigger, internal intermediate mode 4-15
Trigger, single mode 4-15
Triggering 5-8
Triggering commands 5-8, B-17
Triggers, number 4-17

U

USB connection 2-23
USB connector 5-2

V

Visual Basic B-24
Visual Basic programming
example B-24, B-27
Visual C++ B-24
Visual C++ programming example B-29
Visual C++ sample application B-29
Voltage setting selector 2-5
Voltage, maximum input 3-7
Voltage, measure 3-3

W

Website, Keithley 1-5

This page left blank intentionally.

KEITHLEY

Service Form

Model No._____ **Serial No.** _____ **Date**_____

Name and Telephone No._____

Company_____

List all control settings, describe problem and check boxes that apply to problem. _____

_____

_____

❏ Intermittent
❏ Analog output follows display
❏ Particular range or function bad; specify _____

❏ IEEE failure
❏ Obvious problem on power-up
❏ Batteries and fuses are OK
❏ Front panel operational
❏ All ranges or functions are bad
❏ Checked all cables

Display or output (check one)

❏ Drifts
❏ Unable to zero
❏ Unstable
❏ Will not read applied input
❏ Overload

❏ Calibration only
❏ Certificate of calibration required
❏ Data required

(attach any additional sheets as necessary)

Show a block diagram of your measurement system including all instruments connected (whether power is turned on or not). Also, describe signal source.

Where is the measurement being performed? (factory, controlled laboratory, out-of-doors, etc.)

_____

_____

What power line voltage is used? _____ Ambient temperature?°F _____

Relative humidity? _____ Other? _____

Any additional information. (If special modifications have been made by the user, please describe.)

_____

_____

Be sure to include your name and phone number on this service form.

Specifications are subject to change without notice.
All Keithley trademarks and trade names are the property of Keithley Instruments, Inc.
All other trademarks and trade names are the property of their respective companies.

KEITHLEY

A GREATER MEASURE OF CONFIDENCE

Keithley Instruments, Inc.

Corporate Headquarters • 28775 Aurora Road • Cleveland, Ohio 44139 • 440-248-0400 • Fax: 440-248-6168 • 1-888-KEITHLEY (534-8453) • www.keithley.com

12/06